भारतीय मानक
Indian Standard

IS 16726 : 2018

वस्त्रादि — विघटनकारी पैटर्न नायलॉन 6 6 से बने गोला बारुद और हथगोले के लिए थैली — विशिष्टि

Textiles — Pouch for Ammunition and Grenades Made of Disruptive Pattern Nylon 6 6 — Specification

ICS 59.080.99

© BIS 2018

भारतीय मानक ब्यूरो
BUREAU OF INDIAN STANDARDS
मानक भवन, 9 बहादुरशाह ज़फर मार्ग, नई दिल्ली-110002
MANAK BHAVAN, 9 BAHADUR SHAH ZAFAR MARG
NEW DELHI-110002
www.bis.org.in www.standardsbis.in

June 2018 **Price Group 9**

Textiles Protective Clothing Sectional Committee, TXD 32

FOREWORD

This Indian Standard was adopted by the Bureau of Indian Standards, after the draft finalized by the Textiles Protective Clothing Sectional Committee had been approved by the Textile Division Council.

Pouch for ammunition and grenades (Ammo pouches) provide security in storing ammunition, magazines and grenades with ease and safety. Ammo pouches can be used with rifles, shotguns, and grenade launchers, making them the perfect versatile tool for carrying the necessary accessories for weapons. Ammo pouches have been shaped and formed to specifically suit different needs for different guns, as well as for other weapons like individual grenades. This standard has been developed based on the extensive work carried out by Northern India Textile Research Association (NITRA) on the subject and as per the requirement of Indian paramilitary forces.

The composition of the Committee responsible for the formulation of this standard is given in Annex C.

For the purpose of deciding whether a particular requirement of this standard is complied with, the final value, observed or calculated, expressing the result of a test or analysis, shall be rounded off in accordance with IS 2 : 1960 'Rules for rounding off numerical values (*revised*)'. The number of significant places retained in the rounded off value should be the same as that of the specified value in this standard.

Indian Standard

TEXTILES — POUCH FOR AMMUNITION AND GRENADES MADE OF DISRUPTIVE PATTERN NYLON 6 6 — SPECIFICATION

1 SCOPE

1.1 The standard prescribes the requirement of pouches for ammunition and grenades made of disruptive pattern Nylon 6 6 material.

1.2 This standard does not specify the general appearance, lusture, feel, type of finish of pouch

2 REFERENCES

The standards listed in Annex A contain provisions which through reference in this text, constitute provisions of this standard. At the time of publication, the editions indicated were valid. All standards are subjected to revision and parties to agreements based on this standard are encouraged to investigate the possibility of applying the most recent editions of the standards indicated in Annex A.

3 MATERIAL AND MANUFACTURE

3.1 The design and shape of the pouch shall be as shown in Figs. 1 to 15. The tolerances, wherever not specified, for various dimensions given in the figures shall be as follows:

Dimension mm	*Tolerance* mm
Up to 5	± 0.5
Above 5 and up to 10	± 1.0
Above 10 and up to 20	± 1.5
Above 20 and up to 50	± 2.0
Above 50	± 3.0

3.2 The components used in the manufacture of pouch shall be as given in Table 1.

3.2.1 The front and back portions of 'Pouch' are made of three sections. The front portion is made of two sections, one for the right hand side and the other for left hand side; while the back portion is made of one section. The assembly of the three sections is shown in Fig. 1. The dimensions of 'Pouch' shall be as shown in Figs. 2 to 7.

3.2.2 Each of the left hand side and right hand side section of the 'Pouch' shall have two fabric layers. The outer layer shall be made of component – 2, while the inner layer shall be of component – 3. Component – 4 shall be used as piping (*see* Fig. 9 and Fig.10).

3.2.3 The back portion of the 'Pouch' shall be made of two layers of component – 3. The two layers are joined together in such a way that it can be used as a pocket (*see* Fig. 8). The pocket shall be closed with the help of components – 10 and 11. Component – 4 shall be used as piping.

3.2.4 *Pockets*

The 'Pouch' shall have six main pockets numbered as Pocket -1 to 6 as shown in the Fig. 2, Fig. 4, Fig. 9 and Fig. 10. The details pertaining to these pockets shall be as given in clauses **3.2.4.1** to **3.2.4.3**.

3.2.4.1 *Pocket No.-1*

a) The design, dimension and stitching of pocket-1 is given in Fig.11.
b) The pocket-1 has two additional pockets referred as pocket-1A and 1B (*see* Fig. 11).
c) *Fabric* – Component – 1 shall be used
d) *Binding or piping* – Component – 4 shall be used
e) *Ventilator* – Component – 22 shall be used as a ventilator; it shall be positioned at exactly the bottom centre of the pocket-1.
f) The pocket-1 shall be closed with the help of components – 8 and 9. An extra closing system shall also be provided with the help of components – 6, 12, 16 and 18 (*see* Fig. 11).
g) The pocket 1A and pocket 1B shall be closed with the help of components – 10 and 11.

3.2.4.2 *Pockets Nos. - 2, 3 and 4*

a) The design, dimension and stitching of pocket-2 to 4 is given in Fig. 12.
b) *Fabric* — Component – 1 shall be used
c) *Binding or piping* – Component – 4 shall be used.
d) *Ventilator* — Component – 22 shall be used as a ventilator; it shall be positioned at exactly the bottom centre of the pockets-2, 3 and 4.
e) The pockets-2, 3 and 4 shall be closed with the help of components – 8 and 9. An extra closing system shall also be provided with the help of component – 6, 12, 16 and 18 (*see* Fig. 12).

Table 1 Component Used in Manufacture of Pouch
(*Clause* 3.2)

Component No. (1)	Name of the Component (2)	Requirements/Description (3)
1	Disruptive pattern printed Nylon 6 6 plain weave fabric	1) Nylon 6 6 multifilament texturized yarn shall be used 2) Count of yarn (For guidance only): a) Warp count: 600 Denier b) weft count: 600 Denier 3) The fabric shall be water proof and water repellent 4) The fabric shall be 'Heat set' and fully shrunk 5) The fabric shall be coated with polyurethane
2	Nylon 6 6 plain weave base fabric, dyed	1) Nylon 6 6 multifilament texturized yarn shall be used 2) Count of yarn (For guidance only): a) Warp count - 600 Denier b) Weft count - 600 Denier 3) The fabric shall be water proof and water repellent 4) The fabric shall be 'Heat set' and fully shrunk 5) The fabric shall be coated with polyurethane
3	Nylon mesh (warp knit)	1) Nylon 6 6 multifilament texturized yarn shall be used 2) Denier of yarn - 350 (For guidance only) 3) Nos. of hole/Inch^2 – 36 ± 1
4	Binding or piping cloth	1) Nylon 6 6 multifilament yarn shall be used 2) Multifilament Nylon 6 6 yarn of approximately 225 Denier may be used in warp and weft direction 3) Weave - Plain, Needle loom shall be used for the manufacture of piping 4) Width – 25 mm ± 5 percent
5	Nylon tape 50 mm wide	1) Nylon multifilament yarn shall be used 2) Count of yarn (For guidance only): a) Warp count - 850 Denier b) Binding yarn (Warp) – 850 Denier c) Weft count - 450 Denier 3) Total ends (full width), *Min* - 404 (348 warp ends + 56 binding warp ends) 4) Picks per dm, *Min* - 330 5) Weave – As per Fig. 15. Needle loom shall be used for the manufacture 6) Width of nylon tape - 50 ± 1 mm
6	Nylon tape 25 mm wide	1) Nylon multifilament yarn shall be used 2) Count of yarn (For guidance only): a) Warp count- 850 Denier b) Binding yarn (Warp) – 850 Denier c) Weft count - 450 Denier 3) Total ends(full width), *Min* - 203 (175 warp ends + 28 binding warp ends) 4) Picks per dm, *Min* - 340 5) Weave – As per Fig. 15. Needle loom shall be used for the manufacture 6) Width of nylon tape - 25 ± 1 mm
7	Nylon tape 19 mm wide	1) Nylon multifilament yarn shall be used 2) Count of yarn (For guidance only): a) Warp count - 850 Denier b) binding yarn (Warp) - 500 Denier c) Weft count - 850 Denier 3) Total ends (full width), *Min* - 110 (88 warp ends + 22 binding warp ends) 4 Picks per dm - 320 5 Weave – As per Fig. 15 6) Width of nylon tape - 19 ± 1 mm
8	Hook fasteners 50 ± 1 mm wide	Hook fasteners shall conform to the requirements specified in IS 8156 except for width tolerance
9	Loop fasteners 50 ± 1 mm wide	Loop fasteners shall conform to the requirements specified in IS 8156 except for width tolerance
10	Hook fasteners 25 ± 1 mm wide	Hook fasteners shall conform to the requirements specified in IS 8156 except for width tolerance
11	Loop fasteners 25 ± 1 mm wide	Loop fasteners shall conform to the requirements specified in IS 8156 except for width tolerance

Table 1 — (*Concluded*)

Component No. (1)	Name of the Component (2)	Requirements/Description (3)
12	Elastic Tape 25 ± 1 mm wide	Elastic tape shall conform to the requirements specified in IS 9686 except for width tolerance
13	Slide fastener 25 ± 1cm length (open end)	Slide fasteners shall conform to the requirement specified in IS 14181 (Part 1) for designation Medium Special (MS)
14	Slide fastener 25 ± 1 cm length	Slide fasteners shall conforms to the requirement specified in IS 14181 (Part 1) for designation Medium Special (MS)
15	Slide fastener 20 ± 1cm length	Slide fasteners shall conforms to the requirement specified in IS 14181 (Part 1) for designation Medium Special (MS)
16	Side release (Quick release) buckle (SRB)-male	1) It shall be made out of nylon. 2) Dimensions shall conforms to Fig. 14
17	Side release (Quick release) buckle (SRB)-female (For chest and waist strap)	1) It shall be made out of nylon. 2) Dimensions shall conforms to Fig. 14
18	Side release (Quick release) buckle (SRB)-female (For pocket)	1) It shall be made out of nylon. 2) Dimensions shall conforms to Fig. 14
19	Ladder lock	1) It shall be made out of nylon. 2) Dimensions shall conforms to Fig. 14
20	Snap fastener – Male	Snap fastener-Male may conform to requirements specified in IS 4108 for size designation 4
21	Snap fastener – Female	Snap fastener-Female may conform to requirements specified in IS 4108 for size designation 4
22	Eyelet black	Eyelet may conform to requirements specified in IS 4084 for size no. 21.
23	Sewing thread	Nylon sewing thread shall conform to variety no. H1 of IS 4229

f) The pocket-3 has one additional pocket referred as pocket-3A (*see* Fig. 12).

g) At the opening of pocket-3A, component – 12 shall be used (*see* Fig 12). A two layer of component – 4 shall be used in the pocket as shown in the Fig. 12.

3.2.4.3 *Pockets – 5 and 6*

a) The design, dimension and stitching of pockets-5 and 6 is given in Fig.13.

b) *Fabric* – Component – 1 shall be used.

c) *Binding or piping* – Component – 4 shall be used.

d) *Ventilator* – Component – 22 shall be provided as a ventilator; it shall be positioned at exactly the bottom centre of the pocket- 5 and 6.

e) The pocket-5 and 6 shall be closed with the help of components – 20 and 21. Component – 20 shall be attached to the component – 7 and then stitched to the pocket flap, while component – 21 shall be attached to the pocket as shown in the Fig. 13.

3.2.5 *Dyeing or Printing of Component –1*

The dyed and printed fabric shall meet the color fastness properties as given in Table 3. Dyes used for dyeing and printing shall be free from banned amines when tested as per the method specified in IS 15570.

3.2.6 *Shoulder Strap*

Two layers of component – 3 shall be used as shoulder strap which shall be attached to the three sections of ‘Pouch’ as shown in Fig. 9 to Fig. 11. The dimensions shall be as given in Fig. 3 and Fig. 5.

3.2.7 All three sections of ‘Pouch’ are held together with the help three straps made out of component – 7 and 19. The positioning and the dimensions of straps (strap-1, strap-2 and strap-3) shall be as shown in Figs. 2, 4 and 6.

3.2.8 *Chest and Waist Straps*

‘Pouch’ shall have two adjustable green colour straps (chest strap and waist strap) as shown in Fig. 2 and Fig. 4. These straps shall be made of component – 6, component – 12, component – 16 and component – 17. The position and dimensions of these straps shall be as shown in Fig. 2 and Fig. 4.

3.2.9 *Binding Tape or Piping*

Component – 4 shall be used as piping to finish outer edges of ‘Pouch’ (*see* Fig. 4 and Fig. 11). The finished width of piping on face side of ‘Pouch’ shall be 12 mm ± 5 percent.

3.2.10 *Slide Fasteners*

Three slide fasteners (Component – 13, Component – 14 and Component – 15) shall be used in different portions of the ‘Pouch’. The right hand and left hand sections of the front portion of the ‘Pouch’ shall be provided with component – 13 (shown as slide fastener No. 1 in Fig. 2), to open and close ‘Pouch’. The position

FIG. 1 ASSEMBLY OF THREE SECTIONS OF "POUCH"

and dimensions of other two slide fasteners that is slide fastener no. 2 (Component – 14) and slide fastener No. 3 (Component – 15) shall be as shown in Fig. 2 and Fig. 4.

4 STITCHING

4.1 Lock stitch and bartack shall be employed to assemble components of 'Pouch'. In the case of lock stitch, four stitches per cm shall be employed wherever stitching has to be carried out. The width of the bartack shall be minimum 2 mm and for length (*see* Fig. 2). The stitching shall be done with even tension and all loose ends shall be securely fastened off.

4.2 Nylon sewing thread (Component – 23) shall be used for stitching.

5 FREEDOM FROM DEFECT

The 'Pouch' shall be visually examined. It shall be evenly stitched, free from missed stitches, holes, cuts, puckering and other defects. The colour of the sewing thread used for stitching shall not bleed or stains. The 'Pouch' shall be free from dyeing and printing defects. The 'Pouch' shall be free from any other defect which may significantly mark the appearance or serviceability.

6 REQUIREMENTS

6.1 The component — 1 used in the 'Pouch' shall conform to the requirements as given in Table 2.

6.2 The component — 2 used in the 'Pouch' shall conform to the requirements as given in Table 2.

6.3 The component — 3 shall conform to the requirements as given in Table 3.

6.4 The component — 4 shall conform to the requirements as given in Table 4.

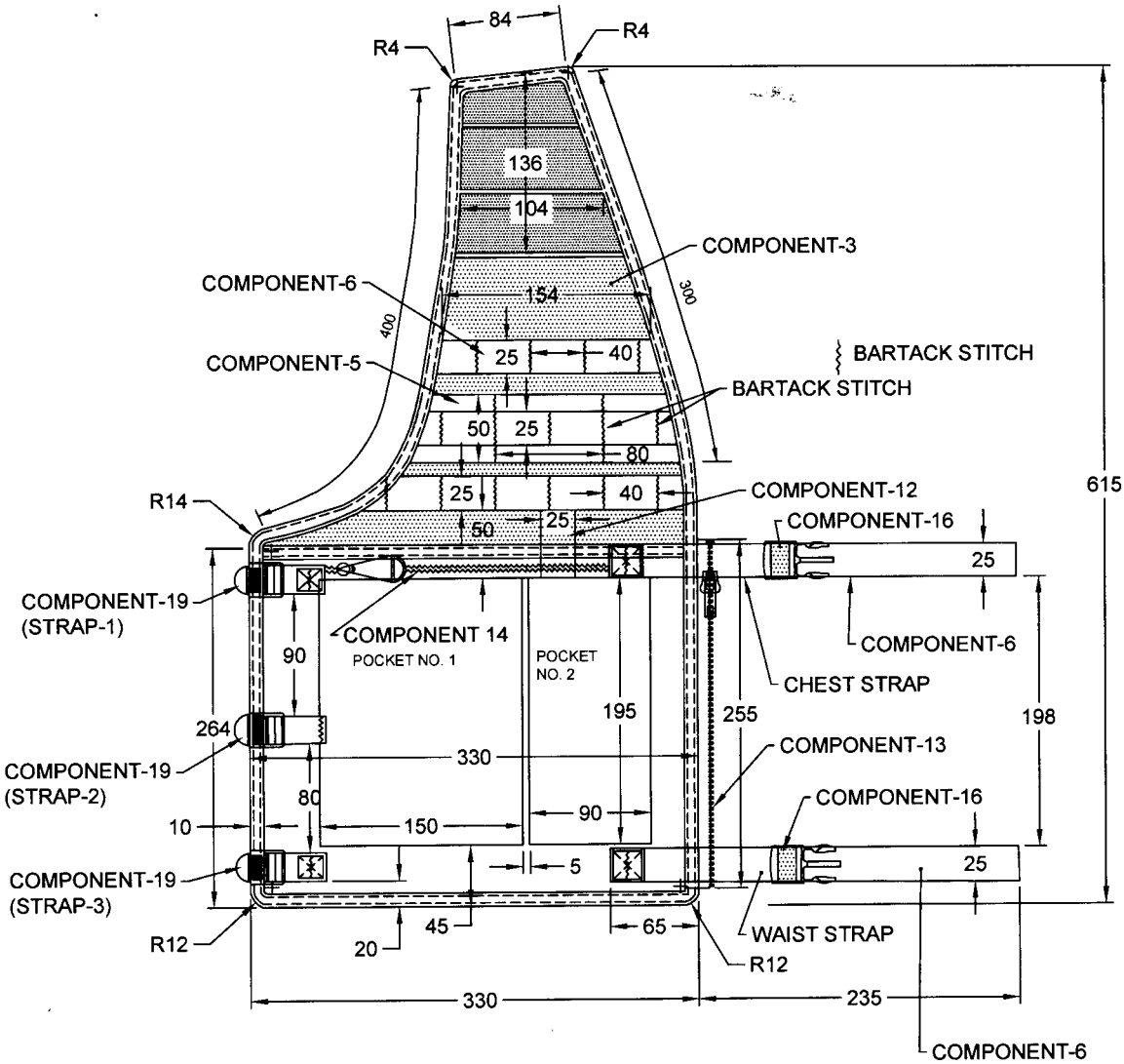

All dimensions in millimetres.

FIG. 2 RIGHT HAND SECTION (FRONT) OF 'POUCH'

Table 2 Requirements of 'Pouch' — Component – 1 and Component – 2
(*Clauses* 6.1 *and* 6.2)

Sl No.	Characteristic	Requirement	Method of Test, Ref to
(1)	(2)	(3)	(4)
i)	Nature of fibre/filament	Nylon 6 6	IS 667
ii)	Nature of coating	Polyurethane	Annex B
iii)	Weave (*see* Notes 1 and 2)	Plain-1 up 1 down	Visual
iv)	End/dm (*see* Notes 1 and 2)	154 ± 2 (double)	IS 1963
v)	Picks/dm (*see* Notes 1 and 2)	110 ± 2 (double)	IS 1963
vi)	Mass, g/m^2	420 ± 20	IS 1964
vii)	Tearing strength, N, *Min*: a) Warpway b) Weftway	 140 140	IS 7016 (Part 3), Method-A2
viii)	Abrasion resistance (Martindale), Using abradant 'Emery paper No. 600' at load of 200 g on uncoated surface	Number of revolutions required for rupture of one or more thread on uncoated surface shall be minimum 10 000	IS 12673 (Part 2)
ix)	Colour fastness to washing, Test C (3), *Min*: a) Change in colour b) Staining on adjacent fabric	 4 or better 4 or better	IS/ISO 105 C10
x)	Colour fastness to perspiration, *Min*: a) Change in colour b) Staining on adjacent fabric	 4 or better 4 or better	IS/ISO 105 E04
xi)	Colour fastness to rubbing, *Min*: a) Dry b) Wet	 4 or better 4 or better	IS 766
xii)	Colour fastness to light, *Min*	5 or better	IS 2454
xiii)	Dimensional change due to relaxation, percentage, *Max*: a) Warpway b) Weftway	 2.0 2.0	IS 2977
xiv)	Water proofness at 30 cm water column height for 60 min	No percolation of water through the fabric or wetting of the outer surface	IS 7016 (Part 7)
xv)	Water repellency (uncoated face), Spray rating, *Min*	80	IS 390
xvi)	Separation of PU film	On fraying threads in warp and weft directions up to 5 mm after cutting the fabric from any portion, there shall not be a continuous PU film on the areas from where the threads have been removed	—
xvii)	Resistance to accelerated ageing at 70 ± 1°C for 168 h in air circulating oven	No sign of cracks, wrinkle or flaking shall be observed	IS 7016 (Part 8)
xviii)	Resistance to damage by flexing after 100 000 cycles	No sign of cracks, softening or signs of brittleness shall be observed	IS 7016 (Part 4)

NOTES
1 Double = 2 parallel yarn.
2 Two parallel yarns are laid as one both in warp and weft.

6.5 The component – 5, component – 6 and component – 7 used in the 'Pouch' shall conform to the requirements as given in Table 5.

6.6 The component – 8, Component – 9, Component – 10 and Component – 11 shall meet the requirements as given in IS 8156 except for width tolerance.

6.7 The Component – 12 of the 'Pouch' shall meet the requirement of IS 9686 except for width tolerance.

6.8 Component – 13, Component –14 and Component –15 used in the 'Pouch' shall conform to the requirement specified in IS 14181 (Part 1) for designation Medium Special (MS).

6.9 The Component – 16, Component – 17, Component – 18 and Component – 19 used in the 'Pouch' shall conform to the requirements as given in Table 6.

Table 3 Requirements of 'Pouch' — Component – 3
(*Clause* 6.3)

Sl No.	Characteristic	Requirement	Method of Test, Ref to
(1)	(2)	(3)	(4)
i)	Nature of fibre/filament	Nylon 6 6 filament	IS 667
ii)	Number of holes per square inch (Rectangular in shape)	36 ± 1	Appendix A of IS 1431
iii)	Mass, g/m^2	270 ± 5 percent	IS 1964
iv)	Colour fastness to washing, Test C(3), *Min*: a) Change in colour b) Staining on adjacent fabric	 4 or better 4 or better	IS/ISO 105 C10
v)	Colour fastness to perspiration, *Min*: a) Change in colour b) Staining on adjacent fabric	 4 or better 4 or better	IS/ISO 105 E04
vi)	Colour fastness to light, *Min*	4 or better	IS 2454
vii)	Dimensional change due to relaxation, percentage, *Max*: a) Warpway b) Weftway	 2.0 2.0	IS 2977
viii)	*p*H value of aqueous extract (Cold method)	6.0 to 8.0	IS 1390

Table 4 Requirements of 'Pouch' — Component – 4
(*Clause* 6.4)

Sl No.	Characteristic	Requirement	Method of Test, Ref to
(1)	(2)	(3)	(4)
i)	Nature of fibre/filament	Nylon 6 6 filament	IS 667
ii)	End/dm	800 ± 5 percent	IS 1963
iii)	Picks/dm	150 ± 5 percent	IS 1963
iv)	Mass per linear meter, g	7.5 ± 5 percent	IS 1964
v)	Breaking strength, N, *Min* (2.5 cm × full width fabric between grips)	2500	IS 1969 (Part 1)
vi)	Colour fastness to washing, Test C(3), *Min*: a) Change in colour b) Staining on adjacent fabric	 4 or better 4 or better	IS/ISO 105 C10
vii)	Colour fastness to light, *Min*	5 or better	IS 2454
viii)	*p*H value of aqueous extract (Cold method)	6.0 to 8.0	IS 1390

Table 5 Requirements of 'Pouch' — Component – 5, Component – 6 and Component – 7
(*Clause* 6.5)

Sl No.	Characteristic	Requirement	Method of Test, Ref to
(1)	(2)	(3)	(4)
i)	Nature of fibre/filament	Nylon	IS 667
ii)	Colour fastness to washing, Test C(3), *Min*: a) Change in colour b) Staining on adjacent fabric	 4 or better 4 or better	IS/ISO 105 C10
iii)	Colour fastness to light, *Min*	4 or better	IS 2454
iv)	Dimensional change due to relaxation, percentage, *Max*: a) Warpway b) Weftway	 2.0 2.0	IS 2977
v)	*p*H value of aqueous extract (Cold method)	6.0 to 8.0	IS 1390

Table 6 Requirements of 'Pouch' — Component – 16, Component – 17, Component – 18 and Component – 19

(*Clause* 6.9)

Sl No.	Characteristic	Requirement	Method of Test, Ref to
(1)	(2)	(3)	(4)
i)	Nature of material	Nylon	a) Nylon is soluble in formic acid b) Melting point of nylon is 215°C to 220°C
ii)	Resistance to accelerated ageing	No apparent change of aged samples in comparison to the original sample in respect of softening, brittleness, colour, tackiness, etc	Keep sample in hot air circulating oven at 70 ± 1°C for 24 h
iii)	Resistance to low temperature	No apparent change of test samples in comparison to the original sample in respect of brittleness and crackness when bent at 180° and back	Keep sample in deep freezer at –10°C for 24 h
iv)	Colour fastness to light, *Min*	4 or better	IS 2454
v)	Pull load, kgf, *Min* (For quick release buckle only)	45 (The male and female part shall not in any case come out either due to slippage or breakage)	By applying load between male and female part of the buckle at a speed of 100 mm/min

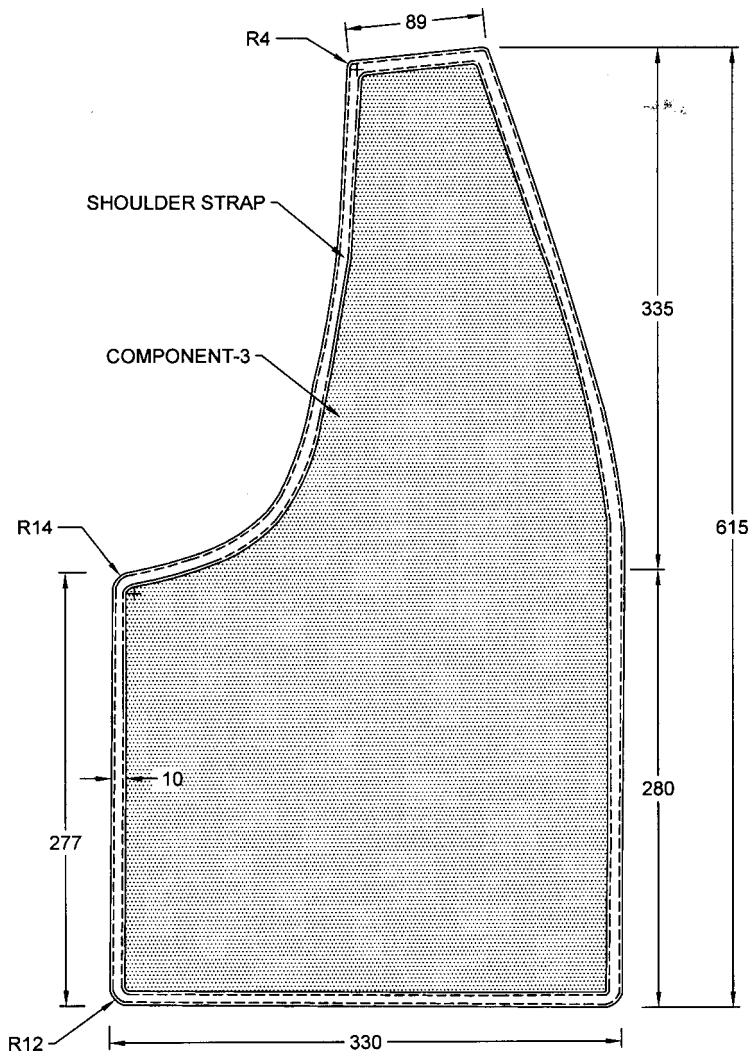

All dimensions in millimetres.

FIG. 3 RIGHT HAND SECTION (BACK) OF 'POUCH'

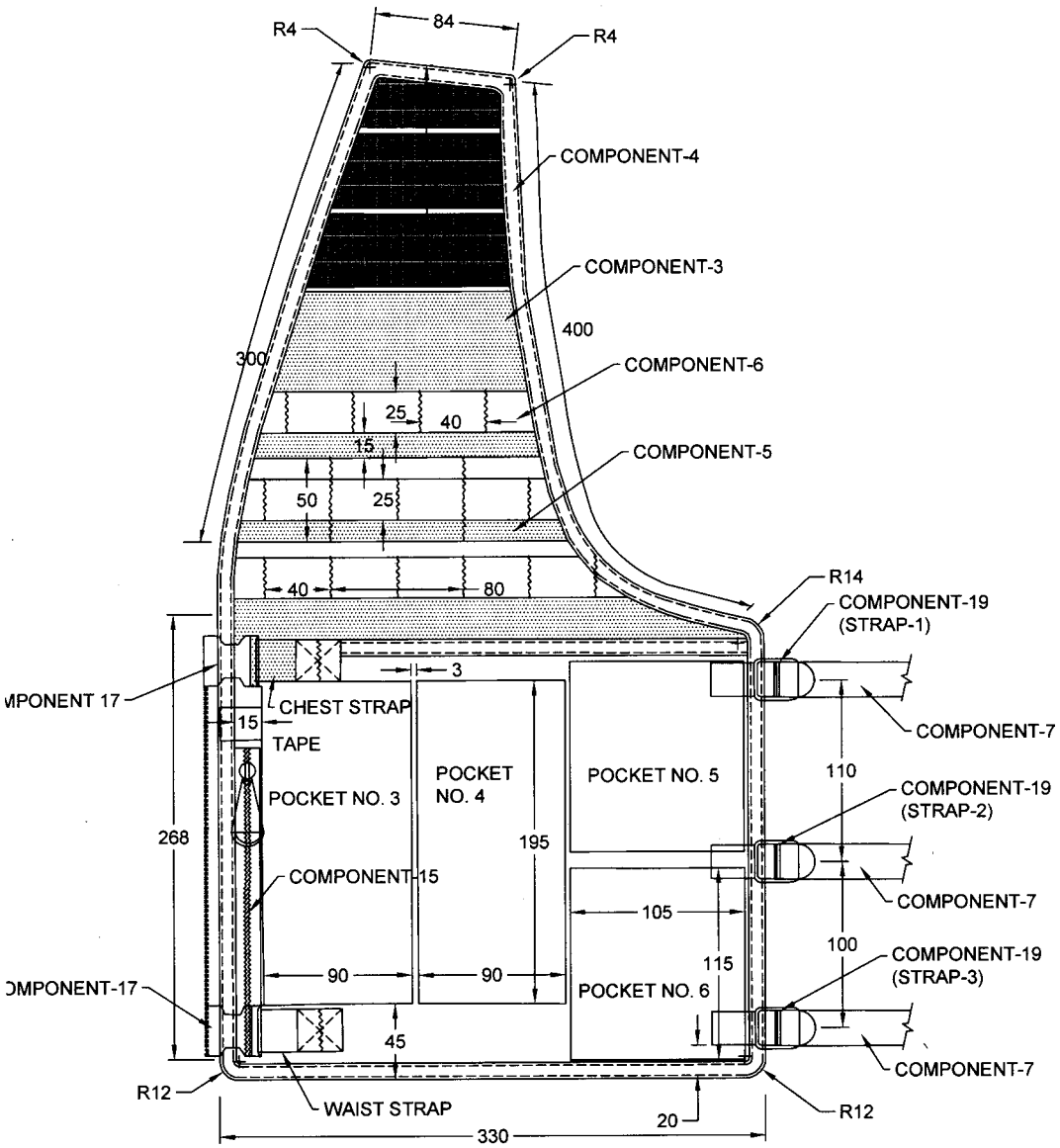

All dimensions in millimetres.

FIG. 4 LEFT HAND SIDE SECTION (FRONT) OF 'POUCH'

6.10 Sealed Sample

In order to illustrate or specify the indeterminable characteristics such as general appearance, luster, feel and print design of the 'Pouch', if a sample has been agreed upon and sealed; the supply shall be conformity with the sample in such respects.

6.10.1 The custody of the sealed sample shall be a matter of prior agreement between the buyer and seller.

6.11 The colour and disruptive pattern print specification shall be as per the buyer requirement.

7 MARKING

7.1 The 'Pouch' shall be legibly and indelibly marked with the following information:

a) Name of the product;
b) Manufacturer's name, initials or trade-mark;
c) Instructions for storage and care;
d) Batch number;
e) Date of manufacture; and
f) Any other information required by the law in force and/or by the buyers.

7.2 BIS Certification Marking

The 'Pouch' may also be marked with the Standard Mark.

7.2.1 The use of the Standard Mark is governed by the provisions of the *Bureau of Indian Standards Act*, 1986 and Rules and Regulations made thereunder. The details

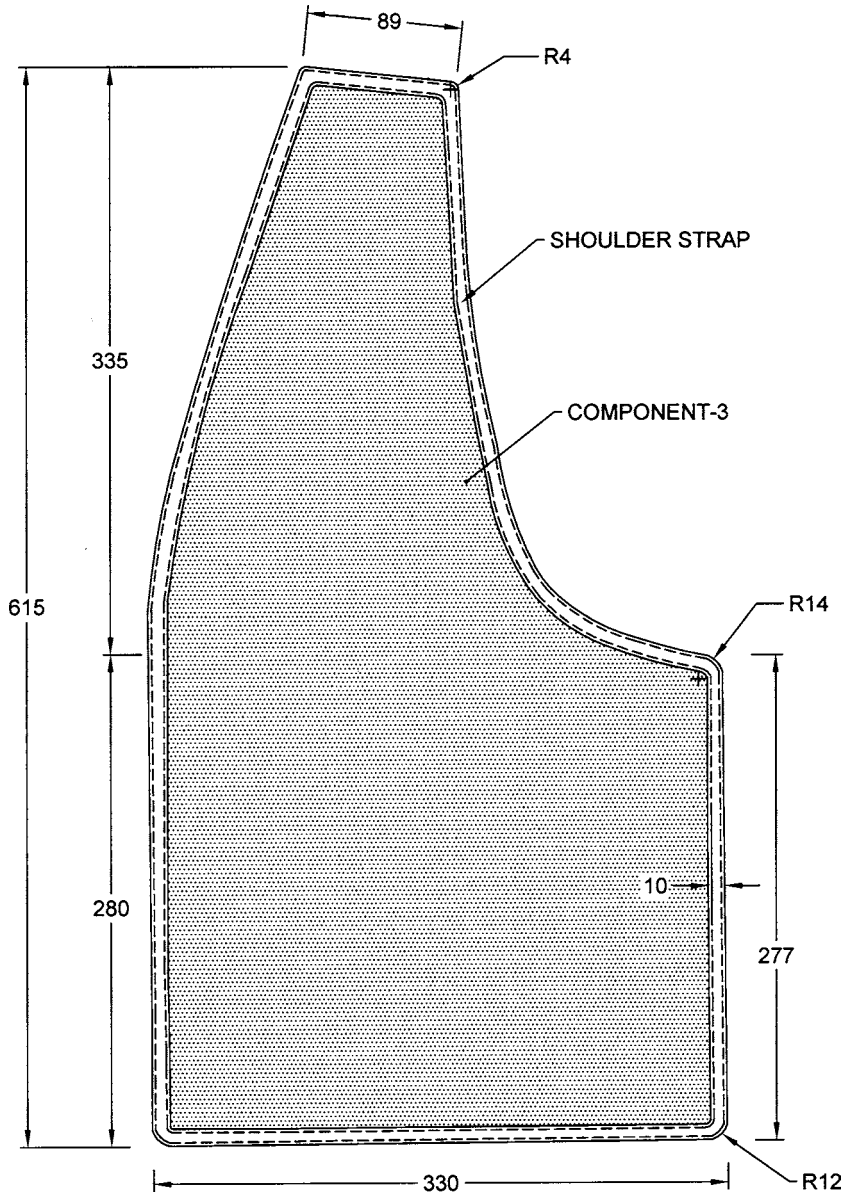

All dimensions in millimetres.

FIG. 5 RIGHT HAND SIDE SECTION (BACK) OF 'POUCH'

of the conditions under which a license for the use of the Standard Mark may be granted to manufacturers or producers may be obtained from the Bureau of Indian Standards.

8 PACKAGING AND PACKING

8.1 The 'Pouch' shall be delivered in a clean and dry condition. Ten such 'Pouch' shall be made into one unit pack (bundle) by suitably folding, placing one over the other and then suitably tying them with three ply twine jute (*see* IS 1912).

8.2 Four such bundles shall form one bale. These bales shall be packed in such a way that it ensures full protection to the contents of the bale. Hessian cloth shall be used to cover the bale. This cloth shall securely sewn around the bale. The bale shall be stitched with double three ply jute twine with not less than twelve stitches per dm, taking care not to pierce the inner wrapping during stitching. Sufficient hessian cloth shall be pulled out each other to form 'ears' of about 15 cm in length. The bale shall be suitably secured by fastening with 12 mm polypropylene strap.

8.3 Before dispatch each bale/package shall be legibly marked by stencil with the following information:

a) Name of the product;
b) Quantity packed in the bale/package;
c) Serial number of the bale/package;

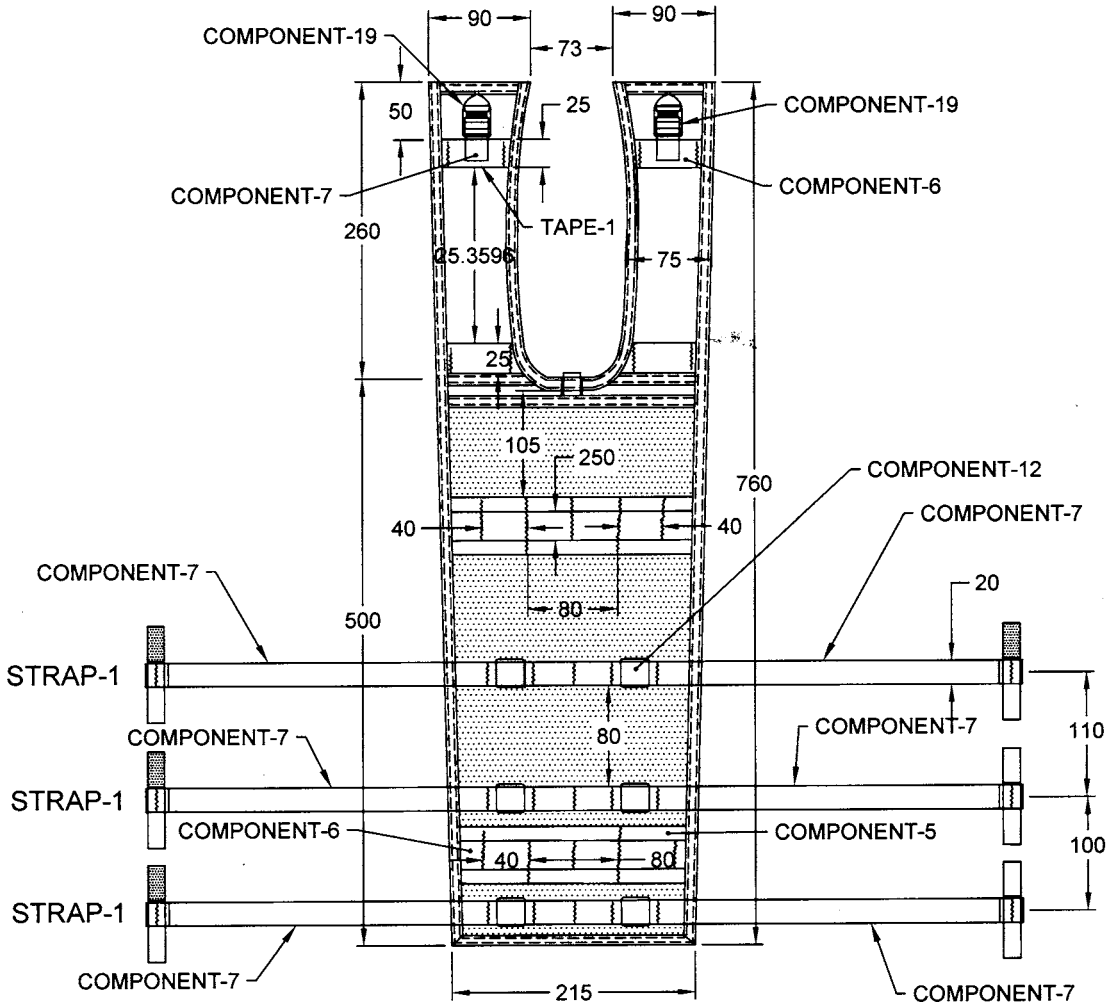

All dimensions in millimetres.

FIG. 6 BACK (OUTER VIEW) OF 'POUCH'

d) Month and year of packing;

e) Name/Trade-mark of the manufacture;

f) Gross weight of the bale/package, in kg;

g) Name and address of the consignee; and

h) Inspection note number and date.

9 SAMPLING AND CRITERIA FOR CONFORMITY

9.1 The sampling procedure detailed in **9.2** and **9.3** shall give desired protection to the buyer and the seller, provided that the lot submitted for inspection is homogeneous. To achieve this, the manufacturer shall maintain a system of process control at all stages of manufacturing ensuring the 'Pouch' tendering by him for inspection to comply with the requirements of this standard in all respects [*see* IS 397 (Part 1) and IS 397 (Part 2)].

9.2 The manufacturer should offer the stores serially numbered and arranged in such a way that the entire lot is accessible to the inspecting officer. The conforming of a lot to the requirement of this specification shall be determined on the basis of the tests carried out on the samples selected from it. The number of samples shall be selected at random in accordance with Table 7.

9.3 The number of test samples and the criterion for conformity for various characteristics shall be as given in Table 8.

9.4 Lot

For the purpose of conformance inspection and test sampling, a lot is defined as all the completed 'Pouch' of the same size and type, with same assemblies, produced in one facility, using the same production processes and materials, and being offered for delivery at one time to buyer against a dispatch note.

Table 7 'Pouch' to be Selected from a Lot and Permissible Number of Non-conforming Pouch(s)
(*Clauses* 9.2 *and* 9.3)

Sl No.	Lot Size	Non-Destructive Testing		Destructive Testing	
		No. of Pouch(s) to be Selected	Permissible Number of Non-Conforming Pouch(s)	No. of Pouch(s) to be Selected	Permissible Number of Non-Conforming Pouch(s)
(1)	(2)	(3)	(4)	(5)	(6)
i)	0-300	10	1	2	0
ii)	301-500	20	2	3	0
iii)	501-1 000	30	3	5	0
iv)	1001-3 000	50	5	8	0
v)	3 001 and above	80	5	13	1

Table 8 Criterion for Conformity
(*Clause* 9.3)

Sl No.	Characteristic	Number of Test Samples	Criteria for Conformity
(1)	(2)	(3)	(4)
i)	Dimensions, Nos. of ends and picks and freedom from defects	All the pouch(s) selected according to the col 3 of Table 7	Non-conforming pouch(s) not to exceed the corresponding number given in col 4 of Table 7
ii)	Weight and mass per linear metre	All the pouch(s) selected according to the col 3 of Table 7	Each observed value satisfies the relevant requirement
iii)	All other requirements	All the pouch(s) selected according to the col 5 of Table 7	Non-conforming Pouch(s) not to exceed the corresponding number given in col 6 of Table 7

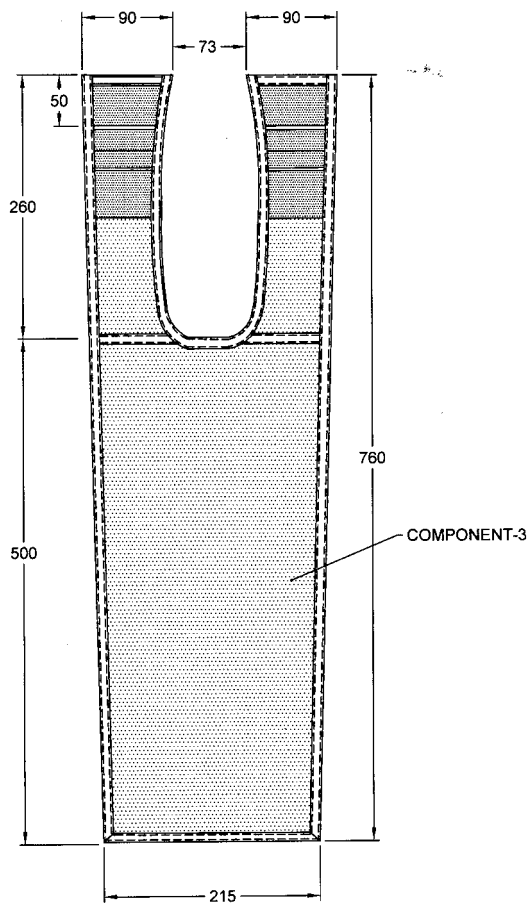

All dimensions in millimetres.

FIG. 7 BACK (INNER VIEW) OF 'POUCH'

FIG. 8 BACK SIDE PORTION

FIG. 9 RIGHT HAND SIDE SECTION

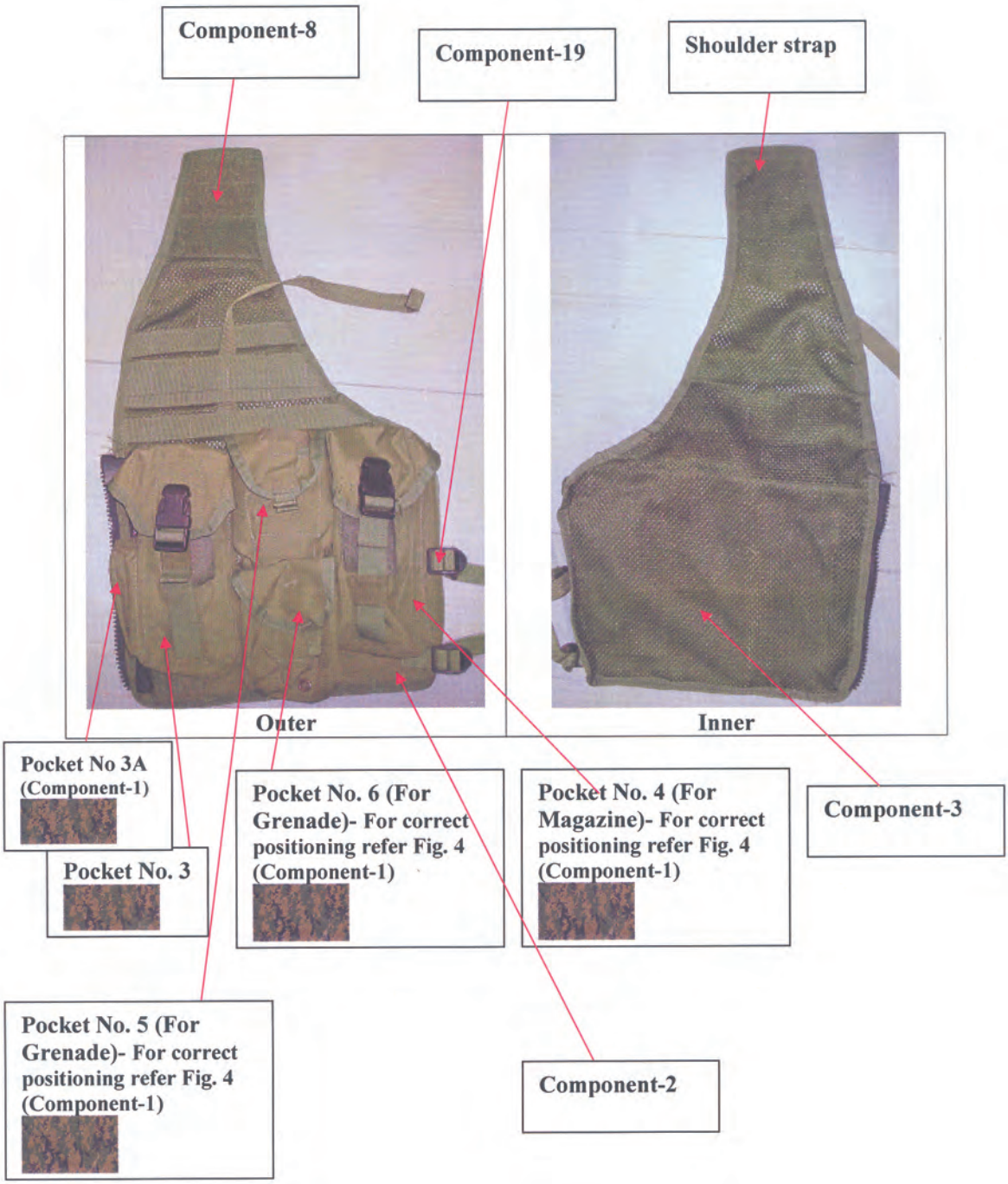

FIG. 10 LEFT HAND SIDE SECTION

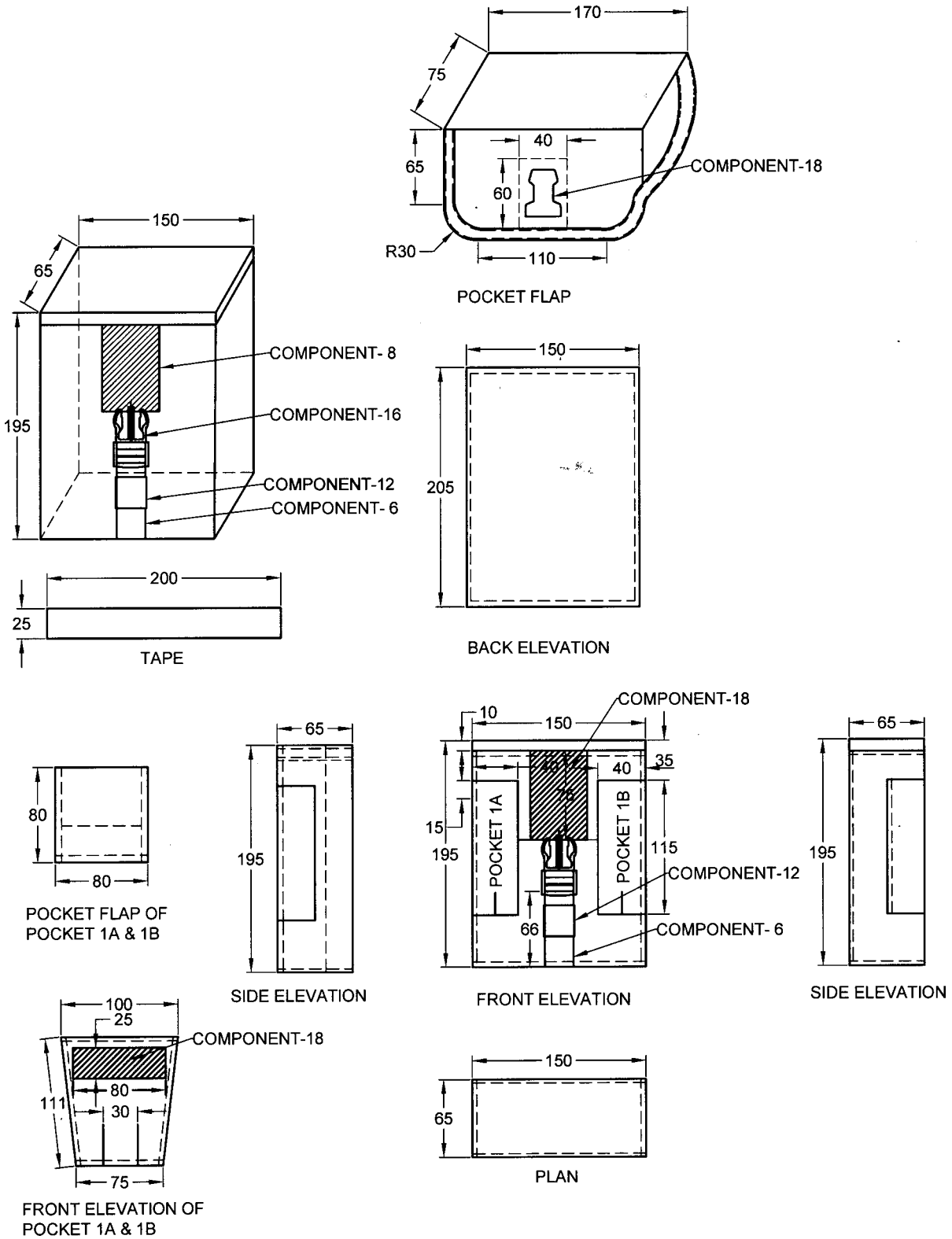

All dimensions in millimetres.

FIG. 11 DIMENSIONS OF POCKET NO. 1, 1A AND 1B

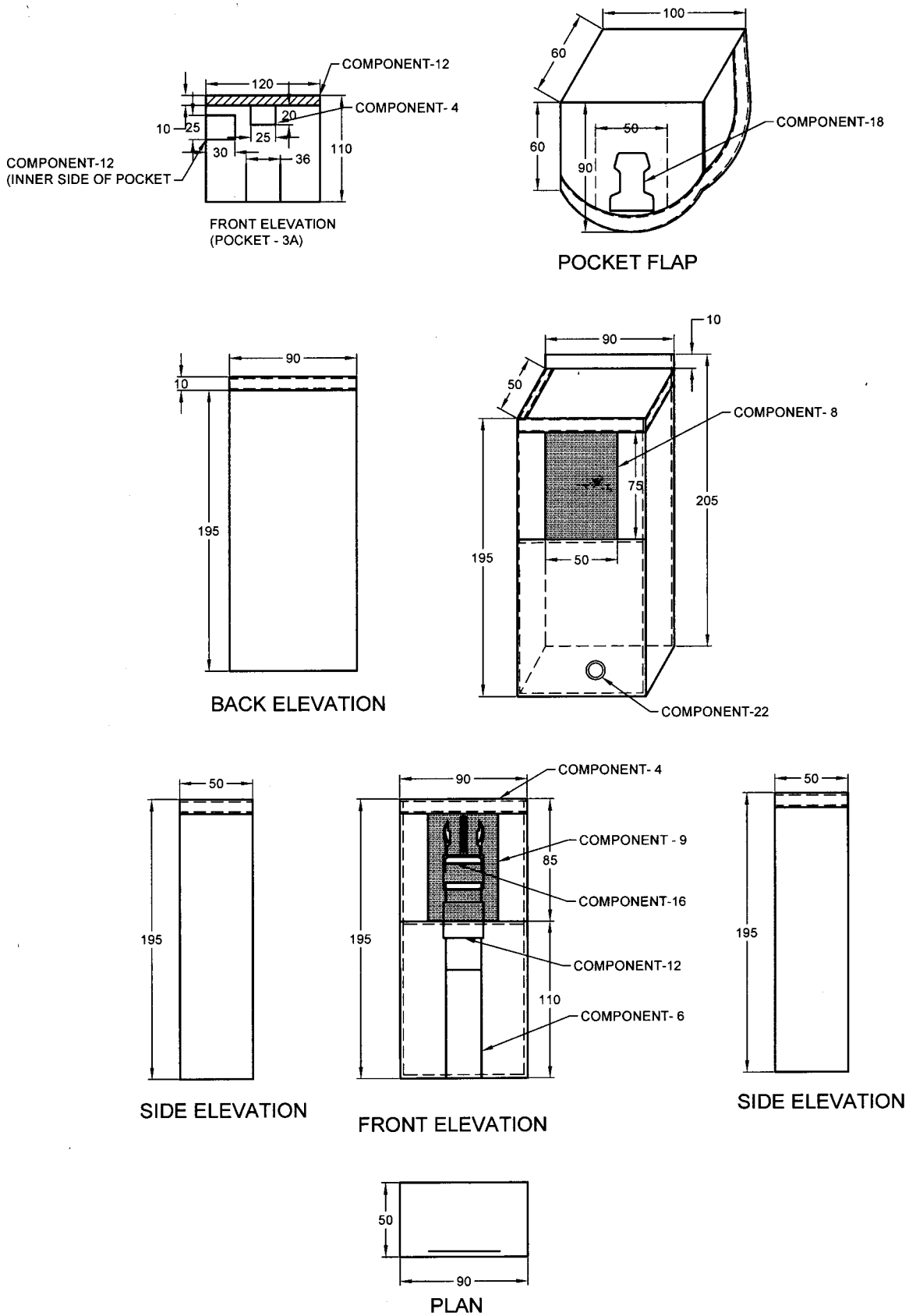

All dimensions in millimetres.

FIG. 12 DIMENSIONS OF POCKET NO. 2, 3, 3A AND 4B

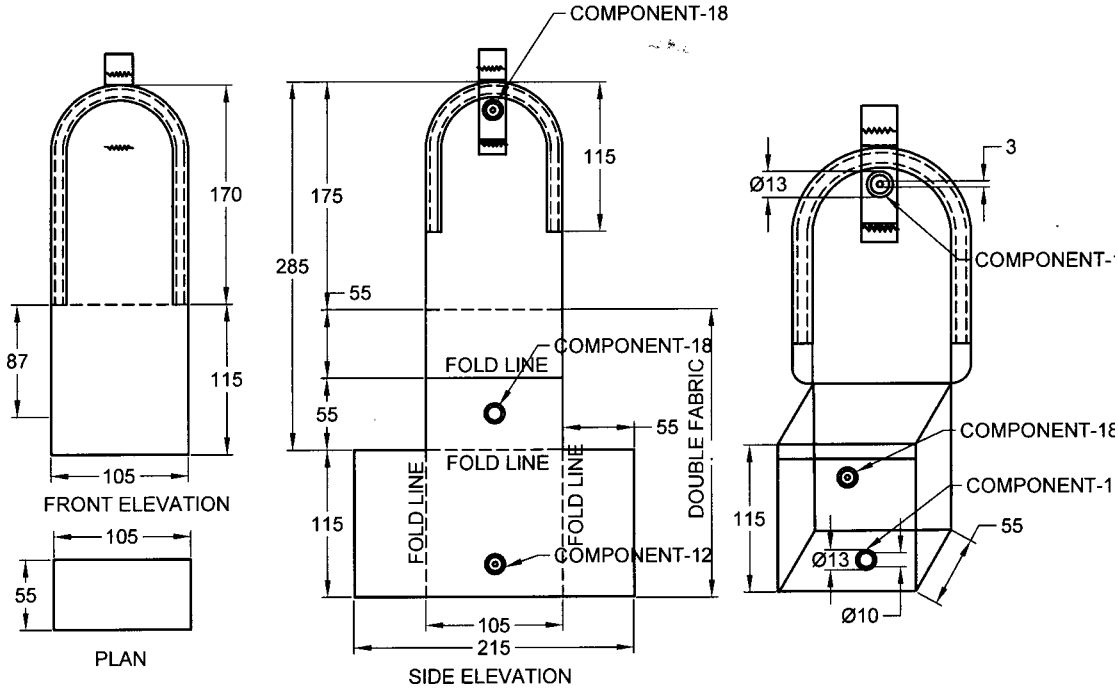

All dimensions in millimetres.

FIG. 13 DIMENSIONS OF POCKET NO. 5 AND 6

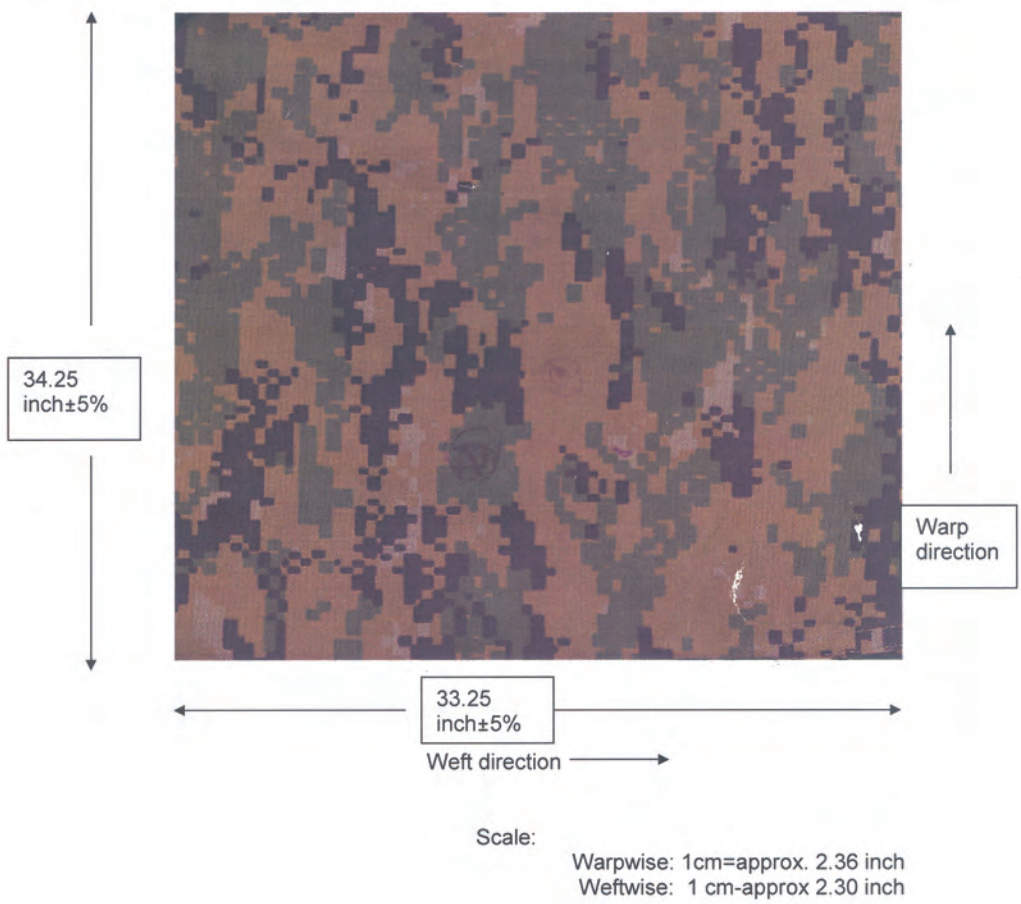

FIG. 14 DISRUPTIVE PRINT (COMPONENT-1) — ONE REPEAT OF THE DESIGN FOR GUIDANCE ONLY (FOR TRUE COLOURS REFER SEALED FABRIC SAMPLE)

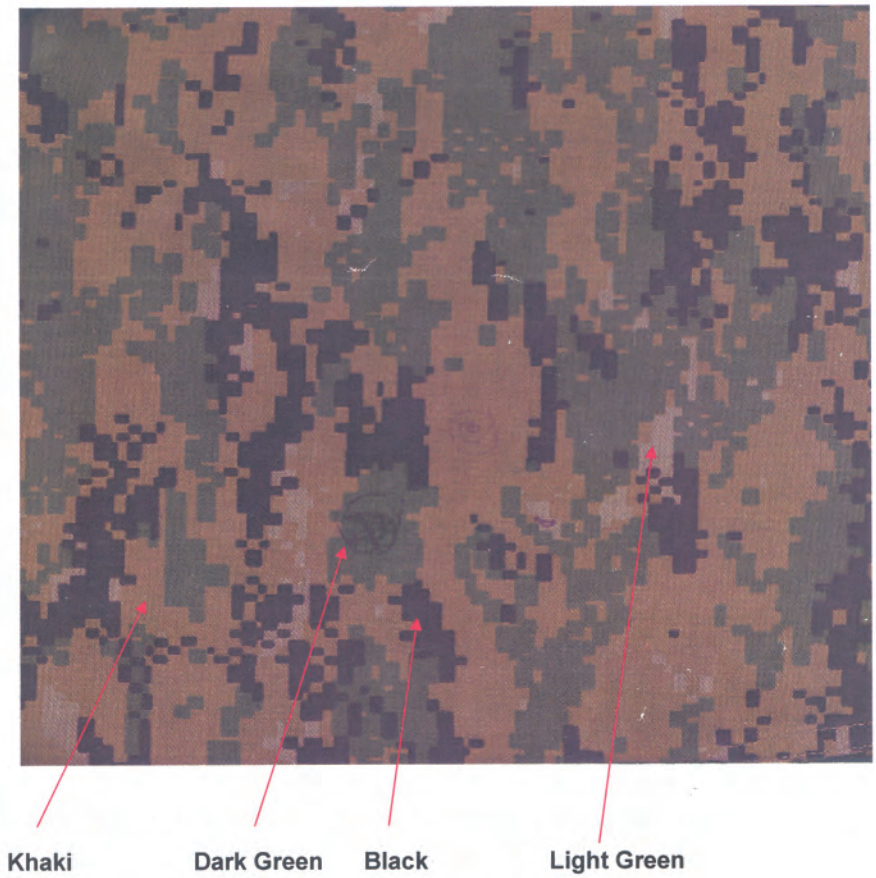

FIG. 15 COMPONENT-1 (FOR COLOUR IDENTIFICATION ONLY)
(FOR TRUE COLOURS REFER SEALED FABRIC SAMPLE)

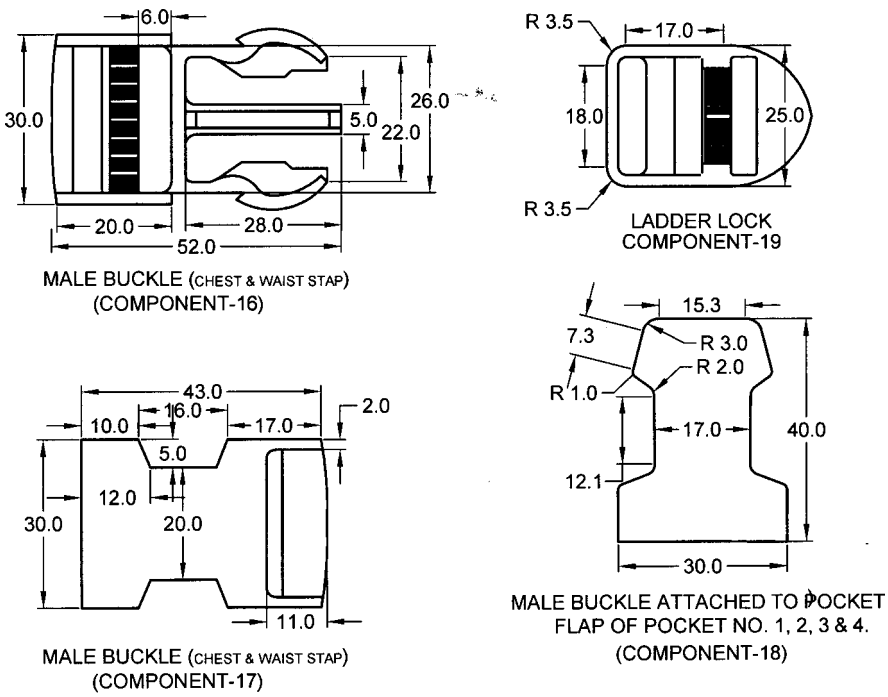

All dimensions in millimetres.

FIG. 16 PLASTIC BUCKLE AND LADDER LOCK

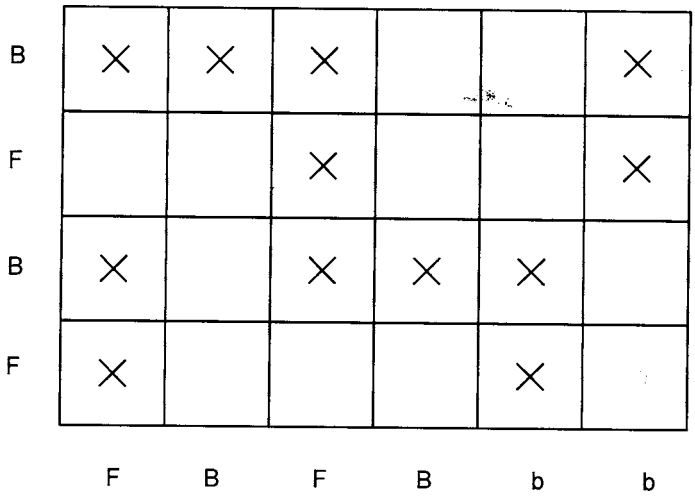

NOTE — One pick in the weave repeat represents two picks in the fabric. One end in the weave repeat represents two ends in the fabric. The fabric to be woven on needle loom

All dimensions in millimetres.

FIG. 17 NYLON TAPE (19 mm AND 50 mm WIDE) — WEAVE REPEAT
(F-FACE, B-BACK b-BINDING)

ANNEX A

(*Clause* 2)

LIST OF REFERRED INDIAN STANDARDS

IS No.	*Title*
105	Textiles — Tests for colour fastness
(Part C10) : 2006	Colour fastness to washing with soap or soap and soda
(Part E04) : 2008	Colour fastness to perspiration
390 : 1975	Method for determining the water repellency of fabrics by water spray test (*first revision)*
397	Method for statistical quality control during production
(Part 1) : 2003	Control charts for variable (*second revision*)
(Part 2) : 2003	Control charts for attributes (*third revision*)
667 : 1981	Methods for identification of textile (*first revision)*
766 : 1988	Method for determination of colour fastness of textile materials to rubbing (*first revision)*
1390 : 1983	Methods for determination of *p*H value of aqueous extracts of textile Materials (*first revision)*
1431 : 1973	Specification for cotton mosquito netting, round mesh (*first revision*)
1912 : 1984	Specification for country jute twine (*second revision*)
1963 : 1981	Methods for determination of threads per unit length in woven fabrics (*second revision*)
1964 : 2001	Textiles — Methods for determination of mass per unit length and mass per area of fabrics *(second revision*)

IS No.	*Title*
1969 (Part 1) : 2009	Textiles — Tensile properties of fabrics — Determination of maximum force and elongation at maximum force: Part 1 Strip method (*third revision*)
2454 : 1985	Methods for determination of colour fastness of textile materials to artificial light (Xenon lamp) (*first revision*)
2977 : 1989	Fabrics (other than wool) — Method for determination of dimensional changes on soaking in water (*first revision*)
4108 : 1984	Specification for snap fasteners for dresses (*first revision*)
4229 : 1992	Textiles — Nylon sewing threads for aerospace purposes — Specification (*second revision*)
7016	Methods of test for coated and treated fabrics
(Part 3) : 1981	Determination of tear strength (*first revision*)
(Part 4) : 2003	Rubber-or plastics-coated fabrics — Determination of resistance to damage by flexing (*second revision*)
(Part 7) : 2009	Rubber-or plastics-coated fabrics — Determination of resistance to penetration by water (*second revision*)
(Part 8) : 1975	Accelerated ageing
8156 : 2014	Fasteners for consumer goods — Synthetic hook and loop tape — Specification (*third revision*)
9686 : 1980	Specification for elastic tape
12673 (Part 2) : 2014	Textiles — Determination of the abrasion resistance of fabrics by the martindale method: Part 2 Determination of the specimen breakdown (*first revision*)
14181 (Part 1) : 2002	Synthetic (plastic) slide fasteners — Special purpose: Part 1 Specification, selection and ordering guideline of the product (*first revision*)
15570 : 2005	Textiles — Method of test — Detection of banned azo colourants in coloured textiles

ANNEX B

[*Table* 2, *Sl No.* (ii)]

IDENTIFICATION OF POLYURETHANE COATING

B-1 Take approximately 5 g of the coated fabric. Treat it with 50 ml glacial acetic acid .by warming for several minutes. To this add 0.1 g p-dimethyamino benzaldehyde. The solution is further heated for 2 to 3 min. The solution turns yellow indicates presence of polyurethane.

ANNEX C

(*Foreword*)

COMMITTEE COMPOSITION

Textiles Protective Clothing Sectional Committee, TXD 32

Organization	*Representative(s)*
Northern India Textile Research Association, Ghaziabad	Dr Arindam Basu (***Chairman***) Dr M. S. Parmar (*Alternate*)
E.I. DU Pont India Private Limited, Gurugram	Shri Manoj Jhaver Shrimati Vedika Kapoor (*Alternate*)
Aeronav Limited, New Delhi	Shri Sandeep Hora
Alok Industries Limited, Mumbai	Representative
Arvind Limited, District Gandhinagar	Shri Narendra Kajale Shri Satyapriya Dash (*Alternate*)
Border Security Force, New Delhi	Shri Hansraj
Central Reserve Police Force, New Delhi	Shri Randhir Kumar Jha
Centre for Fire Explosive and Environment Safety, New Delhi	Dr R. P. Singh Shri Mahipal Meena (*Alternate*)
Confederation of Indian Industry, New Delhi	Shri Raja Bhattacharjee
Defence Bioengineering & Electromedical Laboratory, Bengaluru	Dr T. M. Kotresh Dr R. Indu Shekar (*Alternate*)
Defence Materials and Stores Research & Development Establishment, Kanpur	Dr Anurag Srivastava Dr K. K. Gupta (*Alternate*)
Delhi Fire Service, New Delhi	Shri Atul Garg Shri Vipin Kental (*Alternate*)
Department of Jute & Fibre Technology, Institute of Jute Technology, Kolkata	Prof (Dr) A. K. Samanta
Directorate General of Quality Assurance, New Delhi	Additional Director General (QA)
DSM Dyneema Limited, Mumbai	Shri Harsh Wardhan Sharma Shri Rakesh Gaikwad (*Alternate*)
Fire Adviser, Ministry of Home Affairs, New Delhi	Shri D. K. Shami
Fire Retardant Association of India, New Delhi	Shri P. V. Murali Mohan
Foremost Technico Pvt Ltd, New Delhi	Shri Vinay Khanna Shri Prakash Khanna (*Alternate*)
Indian Institute of Technology, New Delhi	Dr V. K. Kothari
Indian Technical Textile Association, Mumbai	Dr Anup Rakshit Shri Basant Lohia (*Alternate*)
Intertek India Pvt Ltd, Gurugram	Shri Hemant Parab Shri Sundar Krishnan (*Alternate*)
Kusumgar Corporates Pvt Ltd, Mumbai	Shri Yogesh K. Kusumgar Dr M. K. Talukdar (*Alternate*)
NBC Eqpt Wing, Ministry of Defence (DGQA), Pune	Shri B. G. Shinde Lt Col R. S. Jhinkwan (*Alternate*)
Oil Industry Safety Directorate, New Delhi	Representative
Office of Textile Commissioner, Mumbai	Shri Ajay Pandit Shri M. Balasubramanian (*Alternate*)
RDSO, Lucknow	Representative
Reliance Industries Limited, New Delhi	Shri M. S. Verma Shri Vijay Garg (*Alternate*)
RSWM Ltd, Noida	Shri Vijay Yadav
SASMIRA, Mumbai	Dr Manisha Mathur Shrimati Ashwini Sudam (*Alternate*)

Organization	*Representative(s)*
Sure Safety India Pvt Ltd, Vadodara	SHRI SUSHIL BEHL SHRI NISHITH DAND (*Alternate*)
System 5S Private Limited, Chennai	SHRI SUDHIR TAKKER SHRIMATI BHAVNA S. R. TAKKAR (*Alternate*)
Teijin India Private Limited, Gurugram	SHRI PRIYARPAN SRIVASTAVA SHRI RAVI KUMAR (*Alternate*)
Textiles Committee, New Delhi	SHRI PARVEJ AHMED SHRI V. K. R. MACHIRAJU (*Alternate*)
The Bombay Textile Research Association, Mumbai	SHRIMATI L. M. CHANDRAKALA
TUV Rheinland India Pvt Ltd, Gurugram	SHRI CHARAN SINGH
BIS Directorate General	SHRI AWADH KISHORE, Scientist 'E' and Head (TXD) [Representing Director General (*Ex-officio*)]

Member Secretary
SHRI J. K. GUPTA
Scientist 'D' (TXD), BIS

Bureau of Indian Standards

BIS is a statutory institution established under the *Bureau of Indian Standards Act*, 1986 to promote harmonious development of the activities of standardization, marking and quality certification of goods and attending to connected matters in the country.

Copyright

BIS has the copyright of all its publications. No part of these publications may be reproduced in any form without the prior permission in writing of BIS. This does not preclude the free use, in the course of implementing the standard, of necessary details, such as symbols and sizes, type or grade designations. Enquiries relating to copyright be addressed to the Director (Publications), BIS.

Review of Indian Standards

Amendments are issued to standards as the need arises on the basis of comments. Standards are also reviewed periodically; a standard along with amendments is reaffirmed when such review indicates that no changes are needed; if the review indicates that changes are needed, it is taken up for revision. Users of Indian Standards should ascertain that they are in possession of the latest amendments or edition by referring to the latest issue of 'BIS Catalogue' and 'Standards : Monthly Additions'.

This Indian Standard has been developed from Doc No.: TXD 32 (11424).

Amendments Issued Since Publication

Amend No.	Date of Issue	Text Affected

BUREAU OF INDIAN STANDARDS

Headquarters:

Manak Bhavan, 9 Bahadur Shah Zafar Marg, New Delhi 110002
Telephones : 2323 0131, 2323 3375, 2323 9402 *Website*: www.bis.org.in

Regional Offices:			*Telephones*
Central	:	Manak Bhavan, 9 Bahadur Shah Zafar Marg NEW DELHI 110002	2323 7617 2323 3841
Eastern	:	1/14 C.I.T. Scheme VII M, V. I. P. Road, Kankurgachi KOLKATA 700054	2337 8499, 2337 8561 2337 8626, 2337 9120
Northern	:	Plot No. 4-A, Sector 27-B, Madhya Marg, CHANDIGARH 160019	26 50206 265 0290
Southern	:	C.I.T. Campus, IV Cross Road, CHENNAI 600113	2254 1216, 2254 1442 2254 2519, 2254 2315
Western	:	Manakalaya, E9 MIDC, Marol, Andheri (East) MUMBAI 400093	2832 9295, 2832 7858 2832 7891, 2832 7892

Branches: AHMEDABAD. BENGALURU. BHOPAL. BHUBANESHWAR. COIMBATORE. DEHRADUN. DURGAPUR. FARIDABAD. GHAZIABAD. GUWAHATI. HYDERABAD. JAIPUR. JAMMU. JAMSHEDPUR. KOCHI. LUCKNOW. NAGPUR. PARWANOO. PATNA. PUNE. RAIPUR. RAJKOT. VISAKHAPATNAM.

Published by BIS, New Delhi