No. IV-210 1/3/2010-Prov-I
Government of India
Ministry of Home Affairs

26, Man Singh Road, Jaisalmer House,
New Delhi, 23.2.2010

To
The DG: CRPF

Subject:- QRs/Technical Specifications for the Special Equipments for CoBRA Bns.

The QRs/ Technical Specifications in respect of the following Special Equipments for CoBRA Bns as per Appendix, has been accepted by the Competent Authority in MHA.

(1) Foldable Solar Charger-Appendix-A
(2) Compact light weight stainless steel multi utility tool- Appendix-B
(3) Light Weight ballistic protective eyewear against grenade blasts-Appendix-C
(4) Tactical 3 points sling universal- Appendix-D
(5) Waist belt nylon with buckle and rings for facilitating slithering/rappelling-Appendix-E
(6) Jungle Floppy Hat-Appendix-F
(7) Balaclava with convertible properties as Cap Comforter, Facemask and Cold Weather Muffler-Appendix-G
(8) Nylon Life Jacket with expandable Ployethylene Foam, Buckle and Whistle Plastic-Appendix-H

2. Henceforth, CRPF should procure the above equipments required by them strictly as per the laid down Technical Specifications/QRs.

23/2/10
(R.S.Sharma)
Director (Prov)

महानिदेशक सचिव डायरी संख्या
DG's Sectt. Diary No. 378 (Mohan)
महानिदेशक / Director General
अ. महानिदेशक / Add. D.G.
तिथि / Date 05 MAR 2010
म.नि. कार्मिक / परि० / प्रशि. / संभरण / प्रशा. / निर्माण
वि.सं. / निदेशक (चिकित्सा)
IG-Pers/Ops/Trg/Prov/Adm/Works
FA/Director (Medical)

1211
IG Prov

IG Prov.
V-Li
5/2.
Copy to IGSAF

8/3
DC Prov

DIG (Prov)

# CENTRAL RESERVE POLICE FORCE (CoBRA) STANDARD

# SPECIFICATION FOR NYLON LIFE JACKET WITH EXPANDABLE POLYETHYLENE FOAM, BUCKLE AND WHISTLE PLASTIC

***Submitted to :***

**Office of the Inspector General of police, CoBRA Sector**
**CRPF, Sector –IV, PUSHP VIHAR,**
**New Delhi-110017**

***Prepared by :***

**NORTHERN INDIA TEXTILE RESEARCH ASSOCIATION**
**Sector-23, Raj Nagar, Ghaziabad (U.P.)**
**Email : mail@nitratextile.org Fax: 0120-2783596**

**NORTHERN INDIA TEXTILE RESEARCH ASSOCIATION**
**Sector-23, Raj Nagar, Ghaziabad (U.P.)**
**Email: mail@nitratextile.org Fax: 0120-2783596**

# SPECIFICATION FOR *"NYLON LIFE JACKET"*

## RECORD OF AMENDMENTS

| Amendment No. and Date | Amendment pertains to Sl.No./Para No./Column No. | Authority | Amended by Name and Appointment (in block letter) | Signature and Date |
|---|---|---|---|---|
| | | | | |
| | | | | |
| | | | | |
| | | | | |
| | | | | |

# PREAMBLE

The Inspector General of Police (CoBRA Sector), CRPF, has asked NITRA to prepare technical specifications for specification for Nylon life jacket with expandable polyethylene foam, buckle and whistle plastic ("*Nylon Life Jacket*" ) . The specification describes the performance requirements and material properties – ends/inch, picks/inch, weave, weight, yarn count, fibre composition, dimensions, color fastness to light, washing, perspiration, and sea water; pH, dimensional change due to washing, tear strength, tensile strength, abrasion resistance, buoyancy etc. Bureau of Indian Standards (BIS), American Association of Textile Chemists and Colorists (AATCC) and American Society for Testing and Materials (ASTM) test methods are considered to draw this specification.

This report contains 43 pages which describe the technical specifications of "*Nylon Life Jacket*" for CRPF (CoBRA).

Whenever a reference to any other standard occurs in this specification, it shall be taken as reference to the latest version of that standard existing at the time of finalization of a contract.

This technical specification will enable the CRPF (CoBRA) to prepare tender documents (technical details) at the time of placing orders for "*Nylon Life Jacket*" and final inspection as well.

## SPECIFICATION FOR "*NYLON LIFE JACKET*"

# C O N T E N T S


| ITEM | SUBJECT | PAGE NO. |
|---|---|---|
| 0 | FORWARD | 1 |
| 1 | SCOPE | 3 |
| 2 | MATERIAL AND MANUFACTURE | 3 |
| 3 | REQUIREMENTS | 7 |
| 4 | MARKING | 10 |
| 5 | PACKAGING & PACKING | 10 |
| 6 | SAMPLING AND CRITERIA FOR CONFORMITY | 10 |
| 7 | REFERANCES | 42 |
| 8 | ANNEXURE | 43 |

## 0.0 FORWARD

0.1. This specification has been prepared by Office of the Inspector General of Police, CoBRA sector, CRPF on the authority of The Inspector General of Police, CoBRA sector.

0.2. This specification is for use by the CRPF - CoBRA.

0.3. This specification would be used for manufacture, quality assurance and procurement of the item.

0.4. Quality assurance authority for the item covered in this specification is Office of the Inspector General of Police, CoBRA Sector, CRPF, New Delhi. All enquiries regarding this specification, including those relating to any contractual conditions contained therein shall be addressed to the Quality Assurance authority at the following address:

Office of the Inspector General of Police, CoBRA Sector
CRPF, Sector –IV, PUSHP VIHAR,
New Delhi-110017

0.5. Copies of the specification can be obtained from:

Office of the Inspector General of Police, CoBRA Sector
CRPF, Sector –IV, PUSHP VIHAR,
New Delhi-110017

0.6. This specification holds good only for the supply order for which it is issued.

0.7. The Quality Assurance Authority reserves the right to amend or modify this specification as and when required.

0.8. The Quality Assurance Authority is the competent authority to grant concessions, if any, in respect of any clause contained in this specification

0.9. For the purpose of deciding whether a particular requirement of this specification is complied with, the final value, observed or calculated,

expressing the result of a test, shall be rounded off in accordance with IS:2-1960 (Reaffirmed 2006). The number of significant places retained in the rounded off value should be the same as that of the specified value in this specification.

## 1. 0 SCOPE

1.1 The specification prescribes the requirement of "Nylon life jacket with expandable polyethylene foam, buckle and whistle plastic" without collar (vest type) for adults, here in referred as "*Nylon Life Jacket".*

1.2 "*Nylon Life Jacket"* may not be suitable for all conditions.

## 2.0 MATERIAL AND MANUFACTURE

2.1 The design and shape of the "*Nylon Life Jacket"* shall be as per Fig. 1 to 11.

2.2 The various components of the "*Nylon Life Jacket"* shall be as described in the following sub-classes.

2.2.1 The front and back portions of "*Nylon Life Jacket"* is made of three sections. Its front portion is made of two sections, one for the right hand side and the other for left hand side; while the back portion is made of one section. The assembly of the three sections is shown in Fig. 1.

2.2.2 The outer fabric of all three sections of "*Nylon Life Jacket"* shall be of 100% Nylon woven fabric having 1 up 1 down plain Rip stop weave (IS 13510:2000). Continuous filament yarn of Nylon (for guidance 80 Denier with 24 filaments in both directions) shall be used for this purpose. The selvedges of the fabric shall be firm and straight. The fabric shall be 'Heat set' and fully shrunk.

2.2.3 The face side of the outer fabric used for all three sections of "*Nylon Life Jacket*" shall be water repellent and shall be printed in disruptive pattern. The printed pattern shall meet the color fastness properties as given in Table 1. Dyes used for dyeing and printing shall be free from banned amine (Test method IS 15570: 2005). For guidance the disruptive pattern may be obtained by repeats of the design of 25.25 inch±5% in warp direction and 23.25 inch±5% weft direction as shown in Fig. 12. The colours used in the disruptive pattern print are shown in Fig. 13.

2.2.4 The back side of the outer fabric used for all three sections of "*Nylon Life Jacket*" shall be uniformly coated with polyurethane. The coating shall be smooth and it should firmly adhere to the fabric. The coated fabric shall be pliable and free from tackiness, stains, pinholes, surface irregularities, wrinkles, patches and all other coating defects. The coating shall not have any objectionable odor.

2.2.5 The finished outer fabric used for all three sections of "*Nylon Life Jacket*" shall be sufficiently pliable. The water repellent finish and polyurethane coating should not mask the colors used in dyeing and printing.

2.2.6 The right hand and left hand sections of "*Nylon Life Jacket*" shall each have six pieces of low density polyethylene foam. The back portion of "*Nylon Life Jacket*" shall have two pieces of low density polyethylene foam. Each piece of foam shall have five layers and its thickness shall be about 2.4 cm. The combined thickness of two pieces of foam shall be about 5±5% cm. The dimensions and shape of foam to be used in all three sections of "*Nylon Life Jacket*" shall be as specified in Fig. 8 to 10.

2.2.7 All three sections of "*Nylon Life Jacket*" are held together with the help straps and quick release buckles. The positioning of straps and quick release buckles to adjust the dimensions of "*Nylon Life Jacket*" to suit the wearer are shown in Fig. 2, 3 and 7.

2.2.8 Chest & Waist straps: "*Nylon Life Jacket*" shall have two adjustable green colour straps (chest strap & waist strap) as shown in Fig 2 and 3. These straps shall be made of nylon tape and shall conform to the dimensions shown in the Fig. 5 and 6. Needle loom shall be used for the manufacture of nylon tape. Weave repeat of the nylon tape is shown in the Fig. 14. For guidance approximately 850 denier yarn (number of filaments 136) may be used for both warp and weft directions. Locking yarn may be of 210 Denier.

2.2.9 The right hand and left hand sections of "*Nylon Life Jacket*" shall be provided with slide fastener of 25 cm length (Fig. 3), to open and close "*Nylon Life Jacket*".

2.2.10 Audibility: Green color robust plastic whistle to match with the colour of the outer fabric shall be firmly attached to left side pocket using green colour lanyard. It should be attached in such a way that the performance of the "*Nylon Life Jacket*" is not affected; it should be positioned in such a way that it can be easily taken out for use and can be stowed by the wearer. The lanyard shall be fixed to a black color non-metallic eyelet. The positioning of the eyelet shall be as shown in Fig. 2 and 5. The performance of whistle shall not affect after immersion in water.

2.2.11 Lanyard: The lanyard shall be a circular knit plain hose manufactured using 6 needles. The length of the lanyard shall be 32±2 cm. For guidance 840 denier multifilament yarn may be used for the manufacture of lanyard.

2.2.12 Binding tape or piping: 2.5±5% cm wide green color plain weave nylon fabric shall be used as piping to finish outer edges of "*Nylon Life Jacket"* (Fig. 4). Needle loom shall be used for the manufacture of piping. The finished width of piping on face side of "*Nylon Life Jacket"* shall be 1.2±5% cm. For guidance multifilament Nylon 6 yarn of approximately 225 Denier may be used in warp and weft direction.

2.2.13 Slide fasteners: Open end green colour polyester slide fasteners of 'Medium Special' designation (IS 14181 Part 1) shall be employed. It shall comply with the acceptance criteria specified in IS 14181. The length of the slide fastener shall be 25 ±5% cm.

2.2.14 Shoulder strap: Net fabric (warp knitted) made of 100 % Nylon 6 shall be used as shoulder strap which shall be attach to the three sections of *"Nylon Life Jacket"* as shown in Fig. 1. Nylon 6 filament yarns of approximately 350 denier and 70 filaments may be used for the manufacture of net fabric. The dimensions shall be as given in Fig. 4. Details pertaining to design of Net fabric of "Nylon Life Jacket" can be seen from the sample held under the custody of CRPF(CoBRA).

2.2.15 Pockets: The pockets with flaps on right hand and left hand sections of "*Nylon Life Jacket"* shall be as shown in Fig. 2, 3, 5 and 6. The closing and opening of flap shall be with the help of two sets of hook and loop fasteners as shown in these figures. The hooks shall be attached to the pocket while the loops should be attached to the flap. The dimensions of the hook and loop fasteners shall be as given in Fig. 5 and 6.

2.3 STITCHING:

2.3.1 Single needle lock stitch having 30-35 stitches per dm used to fabricate “Nylon Life jacket”. Details pertaining to attachment of various components of *“Nylon Life Jacket”* can be seen from the sample held under the custody of CRPF(CoBRA). The stitching shall be done with even tension and all loose ends shall be securely fastened off.

2.3.2 Nylon sewing thread of green shade confirming variety no. L2 of IS: 4229: 1992, RA 2003 shall be used.

2.4 Freedom from Defect: “*Nylon Life Jacket”* shall be visually examined. It shall be evenly stitched, free from missed stitches, holes, cuts, puckering and other defects. The colour of the sewing thread used for stitching shall not bleed or stain. It shall be free from dyeing & printing defects.

The ““*Nylon Life Jacket”* shall be free from any other defect which may significantly mark the appearance or serviceability. Classification of other defects is given in Table 14.

**3.0 REQUIREMENTS**

3.1 The “*Nylon Life Jacket”* shall be subjected to vertical and horizontal load test in accordance to EN 396 (Annexure A) by applying additional test mass (other than pre load mass) of 200 Kg. The slippage of adjustment device shall not exceed 25 mm.

3.2 The buoyancy shall be obtained essentially by the use of buoyant material. The minimum total buoyancy for whole “*Nylon Life Jacket”* shall not be less than 150 N when tested in accordance with Appendix C of IS 6685 (after 24 hours submerging). The difference between the initial measurement and the measurement after 24 hours shall not exceed 5% of the original buoyancy.

3.3 The “*Nylon Life Jacket”* shall have a resistance to crushing such that its buoyancy will not be less than the 150 N when subjected to a load of 750

N distributed uniformly over the area of the normally folded jacket for a period of 5 minutes when test in accordance to IS 6685. The buoyancy shall be determined immediately after removal of the load, according to Appendix C (clause C-5) of IS 6685.

3.4 The "*Nylon Life Jacket*" shall be capable of withstanding prolonged exposure to heat. The "*Nylon Life Jacket*" shall be subjected to a temperature of 70±1$^{o}$C for 12 hours. At the end of this period, the "*Nylon Life Jacket*" shall show no sign of damage and when observed within 90 seconds in accordance to Appendix C (clause C-5) of IS 6685. After the test, its buoyancy shall not be less than 150 N.

3.5 The "*Nylon Life Jacket*" shall be subjected to a low temperature of -10±1$^{o}$C for 12 hours. The time taken to reach the specified low temperature shall be not more than one hour. At the end of this period, the jacket shall show no sign of damage and when tested within 90 seconds in accordance to Appendix C (clause C-5) of IS 6685. After the test, its buoyancy shall not be less than 150 N.

3.6 The disruptive print outer fabric of "*Nylon Life Jacket*" shall conform to the requirements given in Table 1. Specification for colour used in printing of outer fabric shall be as given in Table 2A, 2B, 2C and 2D.

3.7 Shoulder strap (net fabric) "*Nylon Life Jacket*" shall be made of Nylon. It shall comply with the requirement given in the Table 3. The colour difference ($\Delta$E) shall not be more than 3 from the dark green colour of the outer fabric.

3.8 Polyethylene foam used as a buoyancy material shall meet the requirement as given in Table 4.

3.9 The 25 mm nylon tape used in the chest and waist straps shall comply with the requirement given in the Table 5. The colour of the nylon tape shall be green. Specification for colour shall be as given in Table 6.

3.10 Quick release plastic buckle and D- ring shall be green in colour. The quality requirements of the male plastic buckle, female plastic buckle and D-ring are given in Table 7. Specification for colour shall be as given in Table 8.

3.11 Slide fastener shall comply with the acceptance criteria specified in IS 14181. The slide fastener shall be black in colour. Specification for colour shall be as given in Table 9.

3.12 The hook and loop fastener shall be green in color and shall meet the requirements as given in IS 8156: 1994 RA 2004. The colour difference ($\Delta E$) shall not be more than 3 from the dark green colour of the outer shell fabric.

3.13 Plastic whistle shall meet the requirement as per IS 11608.

3.14 The green colour lanyard shall be used and it shall meet the requirement as given in the Table 10.

3.15 Piping or binding fabric shall be green in colour and meet the requirement as per Table 11 and 12.

3.16 Sealed Sample: In order to illustrate or specify the indeterminable characteristics such as general appearance, luster, feel and print design of the "*Nylon Life Jacket*" , a sample has been agreed upon and sealed; the supply shall be conformity with the sample in such respects.

3.17 The custody of the sealed sample shall be a matter of prior agreement between the buyer and seller.

## 4.0 MARKING

The life jacket shall be legibly and indelibly marked with the following information:

(a) The words "NYLON LIFE JACKET WITH EXPANDABLE POLYETHYLENE FOAM, BUCKLE AND WHISTLE PLASTIC" in block letters of height not less than 15 mm and below the words "CAUTION: May not be suitable for all conditions";
(b) Manufacturer's name, initials or trade-mark;
(c) Instructions for storage and care;
(d) Date of manufacture; and
(e) Any other information required by the law in force and/or by the buyers.

## 5.0 PACKAGING & PACKING

The life jacket shall be delivered in clean and dry condition. The "*Nylon Life Jacket*" shall be packed in polyethylene or polypropylene bags and or in box, as required by the buyer (see IS 2194 and IS 2195).

## 6.0 SAMPLING AND CRITERIA FOR CONFORMITY

6.1 The number of pieces to be selected at random from a lot for inspection shall be according to Table 13.

6.2 The sampling procedure detailed in 6.2 to 6.4 shall give desired protection to the buyer and the seller, provided that the lot submitted for inspection is homogeneous. To achieve this, the manufacturer shall maintain a system of process control at all stages of manufacturing ensuring the "*Nylon Life Jacket*" tendering by him for inspection to comply with the requirements of this standard in all respects.

6.3 Lot: For the purpose of conformance inspection and test sampling, a lot is defined as all the completed "*Nylon Life Jacket*" of the same size and type, with same assemblies, produced in one facility, using the same production processes and materials, and being offered for delivery at one time to buyer against a dispatch note.

6.3.1 The main samples of "*Nylon Life Jacket"* selected according to Table 13 shall be examined for critical, major and minor defects (as mentioned in the Table 14).

6.3.2 The lot shall be considering conforming to the requirement specified in Table 13 if all the "*Nylon Life Jackets"* are found satisfactory.

6.3.3 If lot is found satisfactory according to 6.3.2, the sub-samples as specified in col. 5 of Table 13 shall be drawn and tested for properties as mentioned in the Table 1 to 3 including buoyancy.

6.3.4 The lot shall be declared conforming to the requirements of this specification if the entire test specimen tested in 6.3.3 is found satisfactory.

**Table 1: Requirements of "*Nylon Life Jacket" – Disruptive print Outer fabric***

| Sl. No. | Characteristics | Requirements | Test Method |
|---|---|---|---|

| | | | |
|---|---|---|---|
| 1 | Nature of fibre/filament | Nylon 6 filament | IS: 667: 1981 & IS 2005:1988 |
| 2 | Nature of coating | Polyurethane | See Annexure-1 |
| 3 | End/dm | 400±5% | IS 1963:1981 |
| 4 | Picks/dm | 300±5% | IS 1963:1981 |
| 5 | Mass, $g/m^2$ | 80±5% | IS 1964 : 1970 |
| 6 | Mass of de-proofed fabric, $g/m^2$ | 70±5% | IS 1964 : 1970 |
| 7 | Breaking strength, Newton (Minimum)<br>- Warp-wise<br>- Weft-wise | <br><br>600<br>450 | IS 7016 Pt II:1981 (5 x 20 cm fabric between grips) |
| 8 | Tearing Strength, Newton (Minimum)<br>- Warp-wise<br>- Weft-wise | <br><br>60<br>40 | IS 7016 Pt III:1981, Method A-1 |
| 9 | Colour fastness to Washing<br>- Change in colour<br>- Staining on adjacent fabric | <br>4 or better<br>4 or better | IS 764 : 1979 |
| 10 | Colour fastness to Perspiration<br>- Change in colour<br>- Staining on adjacent fabric | <br><br>4 or better<br>4 or better | IS 971:1983 |
| 11 | Colour fastness to Rubbing<br>- Dry<br>- Wet | <br>4 or better<br>4 or better | IS 766:1988 |
| 13 | Colour fastness to sea water<br>- Change in colour<br>- Staining on adjacent Fabric | <br>4 or better<br>4 or better | IS 690:1988 |
| 14 | Colour fastness to Light | 4 or better | IS 2454:1985 |
| 15 | Dimensional Change due to relaxation, both directions, percentage, maximum | 2.0 | IS 2977 :1989 |

| | | | |
|---|---|---|---|
| 16 | Resistance to accelerated ageing at 70°C±1°C for 168 hrs in air circulating oven | No sign of cracks, wrinkle or flaking should be observed | IS: 7016 Pt. VIII: :1975 |

| | | | |
|---|---|---|---|
| 17 | Resistance to damage by flexing (after 30,000 cycle) | No sign of cracks, softening or signs of brittleness should be observed | IS: 7016 Pt. IV: :1987 |
| 18 | Flame Retardancy<br>a) After flame, second<br>b) After glow, second<br>c) Occurrence of flaming debris | <br>Nil<br>Nil<br><br>Nil | IS 11871: 1986<br>( Method A) |
| 19 | pH value of aqueous extract | 6.0-8.0 | IS 1390 (Cold method) :1983 |
| 20 | Water repellency (face side-uncoated) | Spray rating Min. 80 | IS 390: 1975 |
| 21 | Water proofness (face side-uncoated) | No percolation of water through the fabric or wetting of the outer surface | IS: 7016 Pt VII: :1986 Low pressure method water pressure 30 cm for 30 minutes |
| 22 | Bending length, cm (Maximum)<br>- Warp-wise<br>- Weft-wise | <br>3.5<br>3.3 | IS: 6490: 1971 |
| 23 | Separation of Polyurethane (PU) film | On fraying threads in warp and weft directions up to 5 mm after cutting the fabric from any portion, there shall not be a continuous PU film on the areas where from where the threads have been removed. | |

**Table-2 A: Specification of colour of Disruptive Pattern "*Nylon Life Jacket*"**

***– Disruptive print Outer fabric***

(AATCC Test method 173 : 2005 & AATCC Evaluation Procedure 7 : 2003)

| | | |
|---|---|---|
| **Colour** | : | **Dark Green** |
| **System** | : | **CIE LCH** |
| **Illuminant Observer** | : | **D 65** |
| **Standard Observer** | : | **10 Degree** |

**Tristimulus Values** :

| X | Y | Z |
|---|---|---|
| 7.118 | 7.672 | 4.526 |

**L C H** :

| L | C | H |
|---|---|---|
| 33.290 | 15.451 | 95.631 |

| | | |
|---|---|---|
| **CMC (l:c)** | : | **2:1** |
| **Colour difference, $\Delta E_{cmc}$** | : | **≤ 3.0** |

**Interpretation of Results :**

i) If $\Delta E_{cmc}$ is less than or equal to 3, then sample is acceptable.

ii) If $\Delta E_{cmc}$ is greater than 3, then sample is unacceptable.

***Note-1 :*** Absorbance/reflectance/ transmittance are affected by surface characteristic features of the substrate. Therefore comparison should be made between samples of same type i.e., identical fabric construction parameters and filament/ fibre composition.

***Note-2 :*** Test should be carried out after proper conditioning as per AATCC 173.

**Table 2B: Specification of colour of Disruptive Pattern "*Nylon Life Jacket*" – *Disruptive print Outer fabric***

(AATCC Test method 173 : 2005 & AATCC Evaluation Procedure 7 : 2003)

| | | |
|---|---|---|
| **Colour** | : | **Light Green** |
| **System** | : | **CIE LCH** |
| **Illuminant Observer** | : | **D 65** |
| **Standard Observer** | : | **10 Degree** |

**Tristimulus Values** :

| X | Y | Z |
|---|---|---|
| 13.931 | 15.130 | 10.374 |

**L C H** :

| L | C | H |
|---|---|---|
| 45.812 | 15.017 | 99.851 |

| | | |
|---|---|---|
| **CMC (l:c)** | : | **2:1** |
| **Colour difference, $\Delta E_{cmc}$** | : | **≤ 3.0** |

**Interpretation of Results :**

iii) If $\Delta E_{cmc}$ is less than or equal to 3, then sample is acceptable.

iv) If $\Delta E_{cmc}$ is greater than 3, then sample is unacceptable.

***Note-1 :*** Absorbance/reflectance/ transmittance are affected by surface characteristic features of the substrate. Therefore comparison should be made between samples of same type i.e., identical fabric construction parameters and filament/ fibre composition.

***Note-2 :*** Test should be carried out after proper conditioning as per AATCC 173.

**Table-2C: Specification of colour of Disruptive Pattern *"Nylon Life Jacket" – Disruptive print Outer fabric***

(AATCC Test method 173 : 2005 & AATCC Evaluation Procedure 7 : 2003)

| | | |
|---|---|---|
| **Colour** | : | **Brown** |
| **System** | : | **CIE LCH** |
| **Illuminant Observer** | : | **D 65** |
| **Standard Observer** | : | **10 Degree** |

**Tristimulus Values** :

| X | Y | Z |
|---|---|---|
| 7.157 | 7.186 | 5.728 |

**L C H** :

| L | C | H |
|---|---|---|
| 32.227 | 8.588 | 66.199 |

| | | |
|---|---|---|
| **CMC (l:c)** | : | **2:1** |
| **Colour difference, $\Delta E_{cmc}$** | : | **≤ 3.0** |

**Interpretation of Results :**

v) If $\Delta E_{cmc}$ is less than or equal to 3, then sample is acceptable.

vi) If $\Delta E_{cmc}$ is greater than 3, then sample is unacceptable.

***Note-1 :*** Absorbance/reflectance/ transmittance are affected by surface characteristic features of the substrate. Therefore comparison should be made between samples of same type i.e., identical fabric construction parameters and filament/ fibre composition.

***Note-2 :*** Test should be carried out after proper conditioning as per AATCC 173.

**Table-2D: Specification of colour of Disruptive Pattern "*Nylon Life Jacket*" – *Disruptive print Outer fabric***

(AATCC Test method 173 : 2005 & AATCC Evaluation Procedure 7 : 2003)

| | | |
|---|---|---|
| **Colour** | : | **Black** |
| **System** | : | **CIE LCH** |
| **Illuminant Observer** | : | **D 65** |
| **Standard Observer** | : | **10 Degree** |

**Tristimulus Values** :

| X | Y | Z |
|---|---|---|
| **3.897** | **4.055** | **4.348** |

**L C H** :

| L | C | H |
|---|---|---|
| **23.852** | **0.796** | **2.160** |

| | | |
|---|---|---|
| **CMC (l:c)** | : | **2:1** |
| **Colour difference, $\Delta E_{cmc}$** | : | **≤ 3.0** |

**Interpretation of Results :**

vii) If $\Delta E_{cmc}$ is less than or equal to 3, then sample is acceptable.

viii) If $\Delta E_{cmc}$ is greater than 3, then sample is unacceptable.

***Note-1 :*** Absorbance/reflectance/ transmittance are affected by surface characteristic features of the substrate. Therefore comparison should be made between samples of same type i.e., identical fabric construction parameters and filament/ fibre composition.

***Note-2 :*** Test should be carried out after proper conditioning as per AATCC 173.

**Table 3 : Requirements of "*Nylon Life Jacket" – Shoulder strap net fabric***

| Sl. No. | Characteristics | Requirements | Test Method |
|---|---|---|---|
| 1 | Nature of fibre/filament | Nylon 6 filament | IS: 667 & IS 2005 |

| | | | |
|---|---|---|---|
| 2 | Number of holes/ Sq. Inch (Rectangular in shape) | 30±2 | Guideline of IS 1963: 1981 |
| 3 | Mass, g/ $m^2$ | 350±5% | IS 1964 : 1970 |
| 4 | Colour fastness to Washing<br>- Change in colour<br>- Staining on adjacent fabric | <br>4 or better<br>4 or better | IS 764 : 1979 |
| 5 | Colour fastness to Perspiration<br>- Change in colour<br>- Staining on adjacent fabric | <br>4 or better<br>4 or better | IS 971:1983 |
| 6 | Colour fastness to sea water<br>- Change in colour<br>- Staining on adjacent Fabric | <br>4 or better<br>4 or better | IS 690:1988 |
| 7 | Colour fastness to Light | 4 or better | IS 2454:1985 |
| 8 | Dimensional Change due to relaxation, both directions, percentage, maximum | 2.0 | IS 2977:1989 |
| 9 | pH value of aqueous extract | 6.0-8.0 | IS 1390 (Cold method) :1983 |

**Table 4: Requirements of "*Nylon Life Jacket" – Polyethylene Foam material***

| Sl. No. | Characteristics | Requirements | Test Method |
|---|---|---|---|
| 1 | Nature of foam | Low density Polyethylene | Annexure 2 |
| 2 | Thickness, mm | 24±5% | IS 7888:1976 |
| 3 | Density, kg/ $m^3$ | 22.0±5% | IS 7888:1976 |
| 4 | Compression strength at 25% , kPa (Minimum) | 16.0 | ISO 12402-9 & ISO 3386-1 |
| 5 | Water absorption, Kg/$m^2$ (Maximum) | 1.0 | IS: 6685:1972 (D-3) |

**Table 5 : Requirements of "*Nylon Life Jacket" – Nylon Tape***

| Sl. No. | Characteristics | Requirements | Test Method |
|---|---|---|---|
| 1 | Nature of fibre/filament | Nylon-6 filament | IS: 667 & IS 2005 |

| | | | |
|---|---|---|---|
| 2 | Number of Ends in full width (minimum) | 78 | IS 1963:1981 |
| 3 | Number of Picks/dm (minimum) | 340 | |
| 4 | Width, cm | 2.5±5% | IS 1994 |
| *5* | Mass per linear meter, g | 25±5% | IS 1964 : 1970 |
| 6 | Breaking strength, N (Minimum)<br>- | 4000 | IS 1969:1985 |
| 7 | Colour fastness to Washing<br>- Change in colour<br>- Staining on adjacent fabric | <br>4 or better<br>4 or better | IS 764 : 1979 |
| 8 | Colour fastness to Perspiration<br>- Change in colour<br>- Staining on adjacent fabric | <br>4 or better<br>4 or better | IS 971:1983 |
| 9 | Colour fastness to sea water<br>- Change in colour<br>- Staining on adjacent Fabric | <br>4 or better<br>4 or better | IS 690:1988 |
| 10 | Colour fastness to Light | 4 or better | IS 2454:1985 |
| 11 | Dimensional Change due to relaxation, both directions, percentage, maximum | 2.0 | IS 2977 :1989 |
| 12 | pH value of aqueous extract | 6.0-8.0 | IS 1390 (Cold method) :1983 |

**Table 6: Specification of colour *"Nylon Life Jacket"-Nylon Tape***

(AATCC Test method 173 : 2005 & AATCC Evaluation Procedure 7 : 2003)

| | | |
|---|---|---|
| **Colour** | **:** | **Green** |

| | | |
|---|---|---|
| **System** | : | **CIE LCH** |
| **Illuminant Observer** | : | **D 65** |
| **Standard Observer** | : | **10 Degree** |

**Tristimulus Values** :

| X | Y | Z |
|---|---|---|
| **6.783** | **7.622** | **5.770** |

**L C H** :

| L | C | H |
|---|---|---|
| **33.183** | **10.313** | **115.329** |

| | | |
|---|---|---|
| **CMC (l:c)** | : | **2:1** |
| **Colour difference, $\Delta E_{cmc}$** | : | **≤ 1.5** |

**Interpretation of Results :**

ix) If $\Delta E_{cmc}$ is less than or equal to 1.5, then sample is acceptable.

x) If $\Delta E_{cmc}$ is greater than 1.5, then sample is unacceptable.

***Note-1 :*** Absorbance/reflectance/ transmittance are affected by surface characteristic features of the substrate. Therefore comparison should be made between samples of same type i.e., identical fabric construction parameters and filament/ fibre composition.

***Note-2 :*** Test should be carried out after proper conditioning as per AATCC 173.

**Table 7 : Requirements of "*Nylon Life Jacket*" – *Plastic Buckle (Male & Female) and D-ring***

| Sl. No. | Characteristics | Requirements | Test Method |
|---|---|---|---|
| 1 | Nature of material | Nylon | -Nylon is Soluble in formic acid |

| | | | |
|---|---|---|---|
| | | | -Melting point of Nylon is 215$^{o}$C to 220$^{o}$C |
| 2 | Resistance to accelerated ageing | No apparent change of aged samples in comparison to the original sample in respect of softening, brittleness, colour, tackiness etc. | Keep sample in hot air circulating oven at 70±1$^{o}$C for 24 hrs. |
| 3 | Resistance to low temperature | No apparent change of test samples in comparison to the original sample in respect of brittleness & crackness when bent at 180$^{o}$ and back. | Keep sample in deep freezer at -10$^{o}$C for 24 hrs. |
| 4 | Colour fastness to light | 4 or better | IS 2454:1985 |
| 5 | Pull load, Kgf. (Min) | 45 (The male and female part shall not in any case come out due to slippage without breakage) | Annexure-3 |

**Table 8: Specification of colour of Plastic Buckle (Male & Female) and D-ring "*Nylon Life Jacket*"**

(AATCC Test method 173 : 2005 & AATCC Evaluation Procedure 7 : 2003)

| | | |
|---|---|---|
| **Colour** | : | **Green** |
| **System** | : | **CIE LCH** |
| **Illuminant Observer** | : | **D 65** |
| **Standard Observer** | : | **10 Degree** |

**Tristimulus Values** :

| X | Y | Z |
|---|---|---|
| **8.636** | **9.328** | **7.422** |

**L C H** :

| L | C | H |
|---|---|---|
| **36.608** | **8.802** | **101.626** |

| | | |
|---|---|---|
| **CMC (l:c)** | : | **2:1** |
| **Colour difference, $\Delta E_{cmc}$** | : | **≤ 3.0** |

**Interpretation of Results :**

xi) If $\Delta E_{cmc}$ is less than or equal to 3, then sample is acceptable.

xii) If $\Delta E_{cmc}$ is greater than 3, then sample is unacceptable.

***Note-1 :*** Absorbance/reflectance/ transmittance are affected by surface characteristic features of the substrate. Therefore comparison should be made between samples of same type i.e., identical fabric construction parameters and filament/ fibre composition.

***Note-2 :*** Test should be carried out after proper conditioning as per AATCC 173.

**Table 9: Specification of colour of Slide fastener "*Nylon Life Jacket*"**

(AATCC Test method 173 : 2005 & AATCC Evaluation Procedure 7 : 2003)

| | | |
|---|---|---|
| **Colour** | : | **Black** |

| | | |
|---|---|---|
| **System** | : | **CIE LCH** |
| **Illuminant Observer** | : | **D 65** |
| **Standard Observer** | : | **10 Degree** |

**Tristimulus Values** :

| X | Y | Z |
|---|---|---|
| 2.654 | 2.792 | 3.118 |

**L C H** :

| L | C | H |
|---|---|---|
| 19.191 | 0.814 | 280.431 |

| | | |
|---|---|---|
| **CMC (l:c)** | : | **2:1** |
| **Colour difference, $\Delta E_{cmc}$** | : | **≤ 3.0** |

**Interpretation of Results :**

xiii) If $\Delta E_{cmc}$ is less than or equal to 3, then sample is acceptable.

xiv) If $\Delta E_{cmc}$ is greater than 3, then sample is unacceptable.

***Note-1 :*** Absorbance/reflectance/ transmittance are affected by surface characteristic features of the substrate. Therefore comparison should be made between samples of same type i.e., identical fabric construction parameters and filament/ fibre composition.

***Note-2 :*** Test should be carried out after proper conditioning as per AATCC 173.

**Table 10 : Requirements of "*Nylon Life Jacket*" - *Lanyard***

| Sl. No. | Characteristics | Requirements | Test Method |
|---|---|---|---|

| | | | |
|---|---|---|---|
| 1 | Nature of fibre/filament | Nylon-6 filament | IS: 667 & IS 2005 |
| 2 | Course/inch (minimum) | 24 | IS 1963:1981 |
| 3 | Length, cm | 32±2 | IS 1954:1990 |
| 4 | Mass per linear meter, g | 2.5±5% | IS 1964 : 1970 |
| 5 | Breaking strength, Newton (Minimum)<br>- | 250 | IS 1969:1985 |
| 6 | Colour fastness to Washing<br>- Change in colour<br>- Staining on adjacent fabric | <br>4 or better<br>4 or better | IS 764 : 1979 |
| 7 | Colour fastness to Perspiration<br>- Change in colour<br>- Staining on adjacent fabric | <br>4 or better<br>4 or better | IS 971:1983 |
| 8 | Colour fastness to sea water<br>- Change in colour<br>- Staining on adjacent Fabric | <br>4 or better<br>4 or better | IS 690:1988 |
| 9 | Colour fastness to Light | 4 or better | IS 2454:1985 |
| 10 | Dimensional Change due to relaxation, both directions, percentage, maximum | 2.0 | IS 2977:1989 |
| 11 | pH value of aqueous extract | 6.0-8.0 | IS 1390 (Cold method) :1983 |
| 12 | Colour | Match with dark green colour of disruptive print outer fabric | Visual |

**Table 11 : Requirements of "*Nylon Life Jacket*" - *Piping***

| Sl. No. | Characteristics | Requirements | Test Method |
|---|---|---|---|

| | | | |
|---|---|---|---|
| 1 | Nature of fibre/filament | Nylon 6 filament | IS: 667 & IS 2005 |
| 2 | End/dm | 800±5% | IS 1963:1981 |
| 3 | Picks/dm | 150±5% | IS 1963:1981 |
| 4 | Mass/ Linear meter, g | 7.5±5% | IS 1964 : 1970 |
| 5 | Breaking strength, N (Minimum) | 2500 | IS 1969:1985 (2.5 cm x full width fabric between grips) |
| 6 | Colour fastness to Washing<br>- Change in colour<br>- Staining on adjacent fabric | <br>4 or better<br>4 or better | IS 764 : 1979 |
| 7 | Colour fastness to Perspiration<br>- Change in colour<br>- Staining on adjacent fabric | <br>4 or better<br>4 or better | IS 971:1983 |
| 8 | Colour fastness to sea water<br>- Change in colour<br>- Staining on adjacent Fabric | <br>4 or better<br>4 or better | IS 690:1988 |
| 9 | Colour fastness to Light | 5 or better | IS 2454:1985 |
| 10 | Dimensional Change due to relaxation, both directions, percentage, maximum | 2.0 | IS 2977:1989 |
| 11 | pH value of aqueous extract | 6.0-8.0 | IS 1390 (Cold method) :1983 |

**Table 12: Specification of colour of piping *"Nylon Life Jacket"***

(AATCC Test method 173 : 2005 & AATCC Evaluation Procedure 7 : 2003)

| | | |
|---|---|---|
| **Colour** | : | **Green** |
| **System** | : | **CIE LCH** |
| **Illuminant Observer** | : | **D 65** |
| **Standard Observer** | : | **10 Degree** |

**Tristimulus Values** :

| X | Y | Z |
|---|---|---|
| 6.170 | 7.202 | 4.893 |

**L C H** :

| L | C | H |
|---|---|---|
| 32.262 | 13.642 | 120.369 |

| | | |
|---|---|---|
| **CMC (l:c)** | : | **2:1** |
| **Colour difference, $\Delta E_{cmc}$** | : | **≤ 3.0** |

**Interpretation of Results :**

xv) If $\Delta E_{cmc}$ is less than or equal to 3, then sample is acceptable.

xvi) If $\Delta E_{cmc}$ is greater than 3, then sample is unacceptable.

***Note-1 :*** Absorbance/reflectance/ transmittance are affected by surface characteristic features of the substrate. Therefore comparison should be made between samples of same type i.e., identical fabric construction parameters and filament/ fibre composition.

***Note-2 :*** Test should be carried out after proper conditioning as per AATCC 173.

**Table 13 : Scale of sampling of *"Nylon Life Jacket"***

| Lot size | Main sample size | Sub-sample size |
|---|---|---|

| (1) | For critical defects as per Table 7 (2) | For major defects as per Table 7 (3) | For minor defects as per Table 7 (4) | (5) |
|---|---|---|---|---|
| Up to 90 | All | 13 | 6 | 5 |
| 91-150 | All | 13 | 7 | 6 |
| 151-280 | All | 20 | 10 | 7 |
| 281-500 | All | 29 | 11 | 9 |
| 501-1200 | All | 34 | 15 | 11 |
| 1201-3200 | All | 42 | 18 | 13 |

**Table 14 : Classification of defects *"Nylon life jacket"***

| Categories | Defects |
|---|---|
| Critical | Components damaged, incorrect, missing, misfitting, or faulty, impairing the function of the preserver as life saving equipment |
| Major | i) Positioning of body strap assembly is incorrect<br>ii) Stitching of *outer shell fabric*, webbing and tapes, nonconforming; not correct type stitch.<br>iii) Various patch and pockets are not located in the position as specified<br>iv) Dimensions not as specified on applicable drawings |
| Minor | i) Completed safety jacket not clean; evidence of dirt or oil spots.<br>ii) Improper tensioning in stitching in parts other than the body strap assembly<br>iii) Incorrect or illegible marking on the safety jacket. |

**Front view (Slide fastener position)**

**Front view (Plastic buckle position)**

**Right side view**

**Left side view**

**Back view**

**Figure 1 : Assembly of three sections of "Nylon Life Jacket" (Plastic whistle is not shown)**

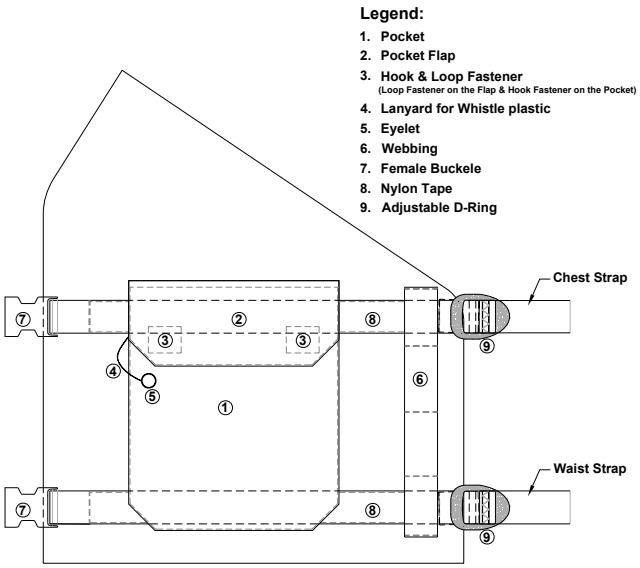


**Fig.-2 Front Section - Left Portion**

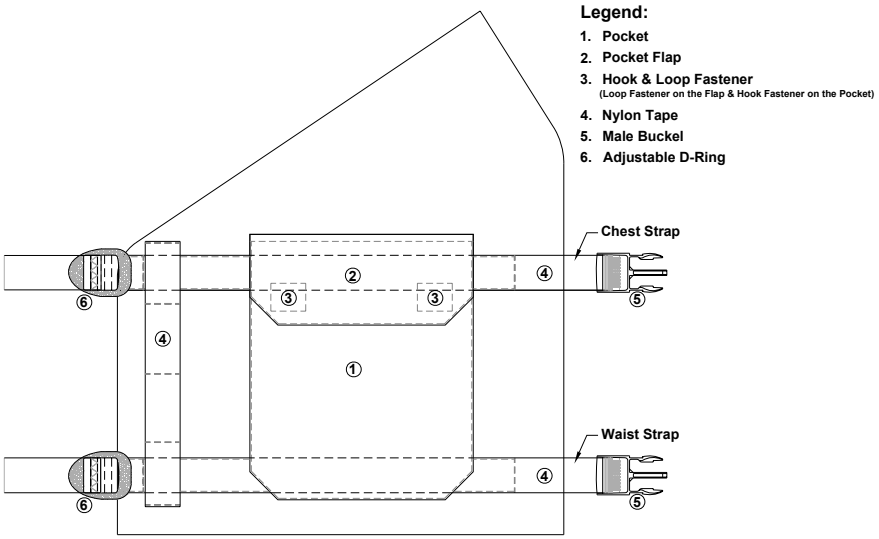


**Fig.-3 Front Section - Right Portion**

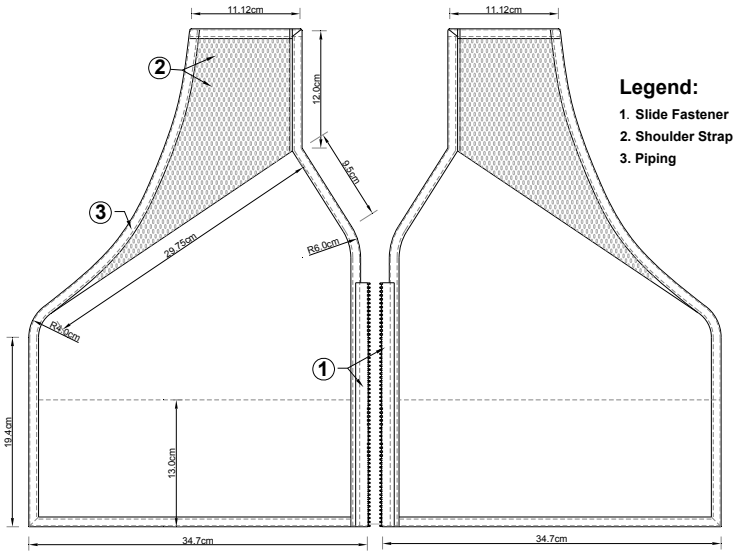


**Fig.-4 Front Sections - Back Side View**

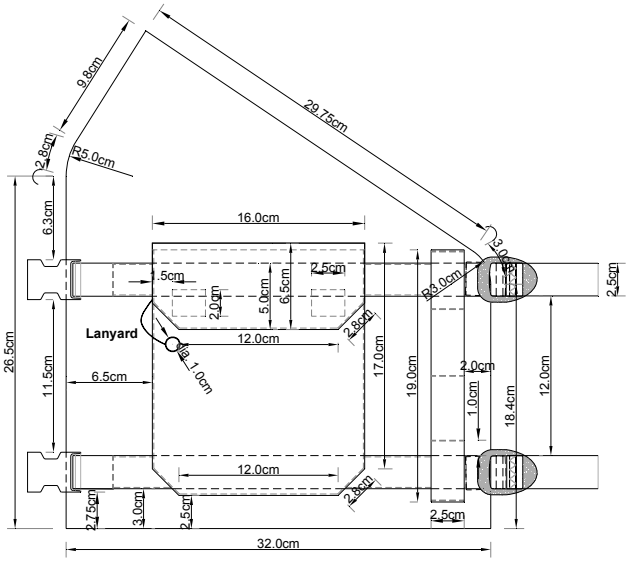


**Fig.-5 Dimension of Life Jacket (*Left Portion of Front Section*)**

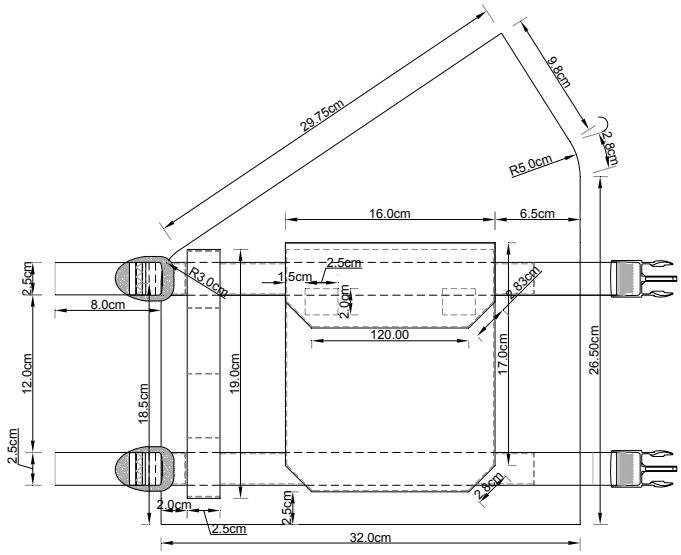


**Fig.-6 Dimension of Life Jacket (*Right Portion of Front Section*)**

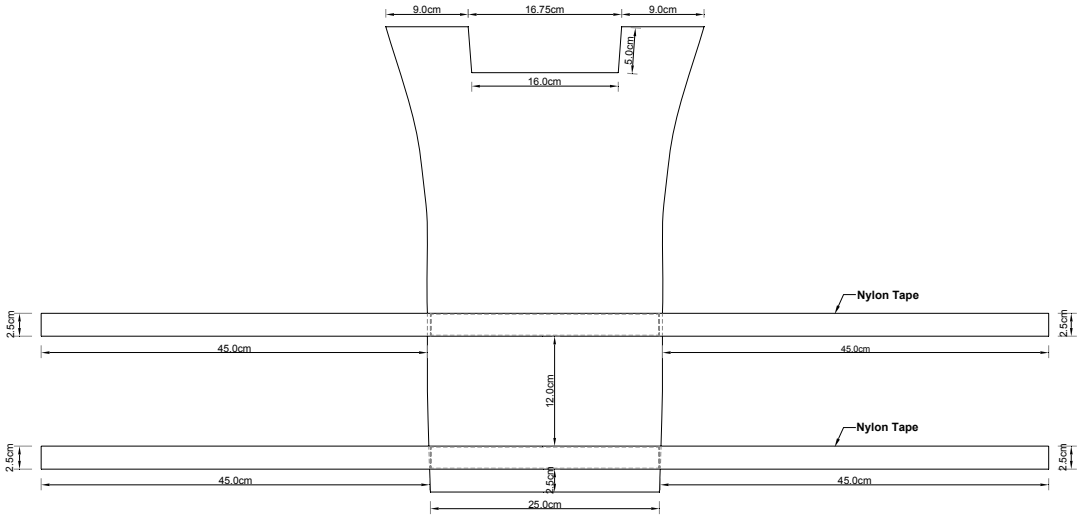


**Fig.-7 Dimensions of Life Jacket (*Back Portion of Section*)**

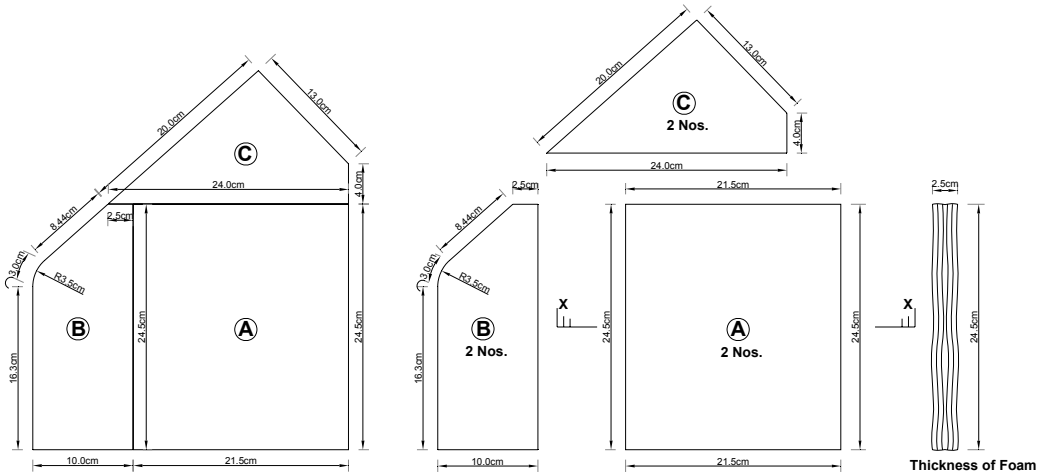


**Fig.-8 Dimensions: Right Front Section Foam**

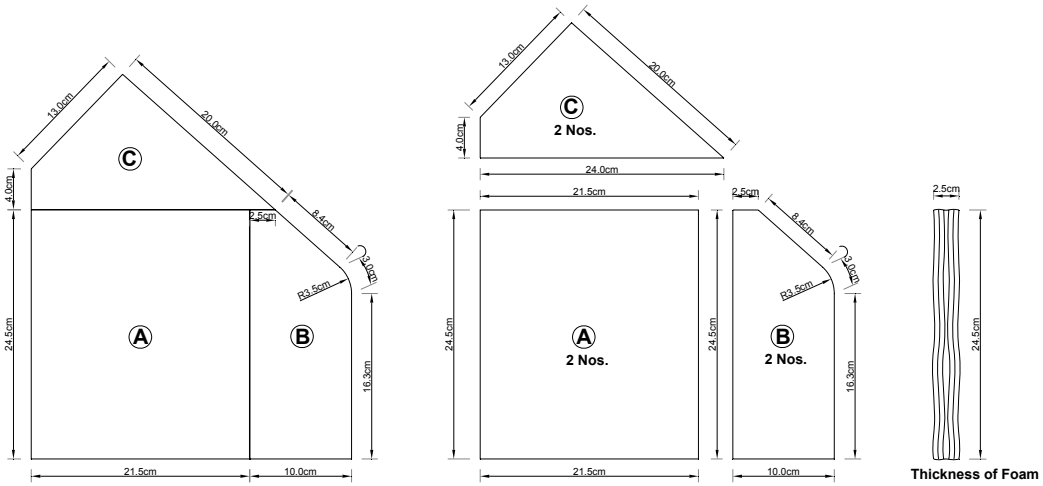


**Fig.-9 Dimensions: Left Front Section Foam**

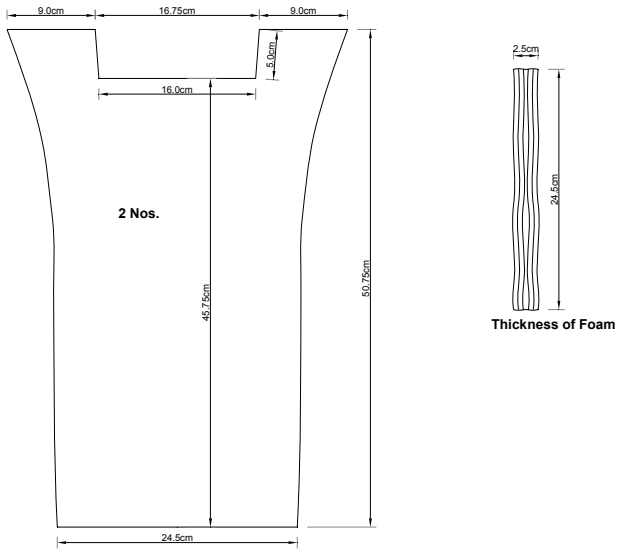


**Fig.-10 Dimensions: back Section Foam**

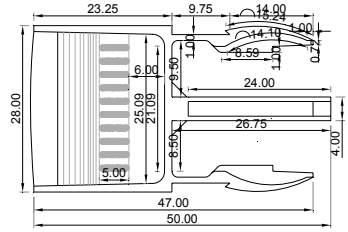


**Male Buckle**

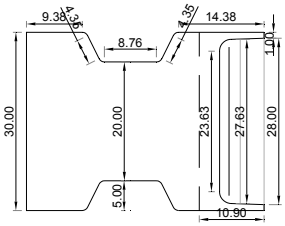


**Female Buckle**

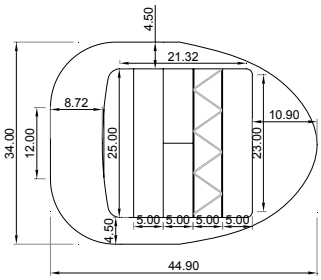


**D-Ring**

**Fig.-11 Plastic Buckle & D-Ring**

(*All dimensions are in mm*)

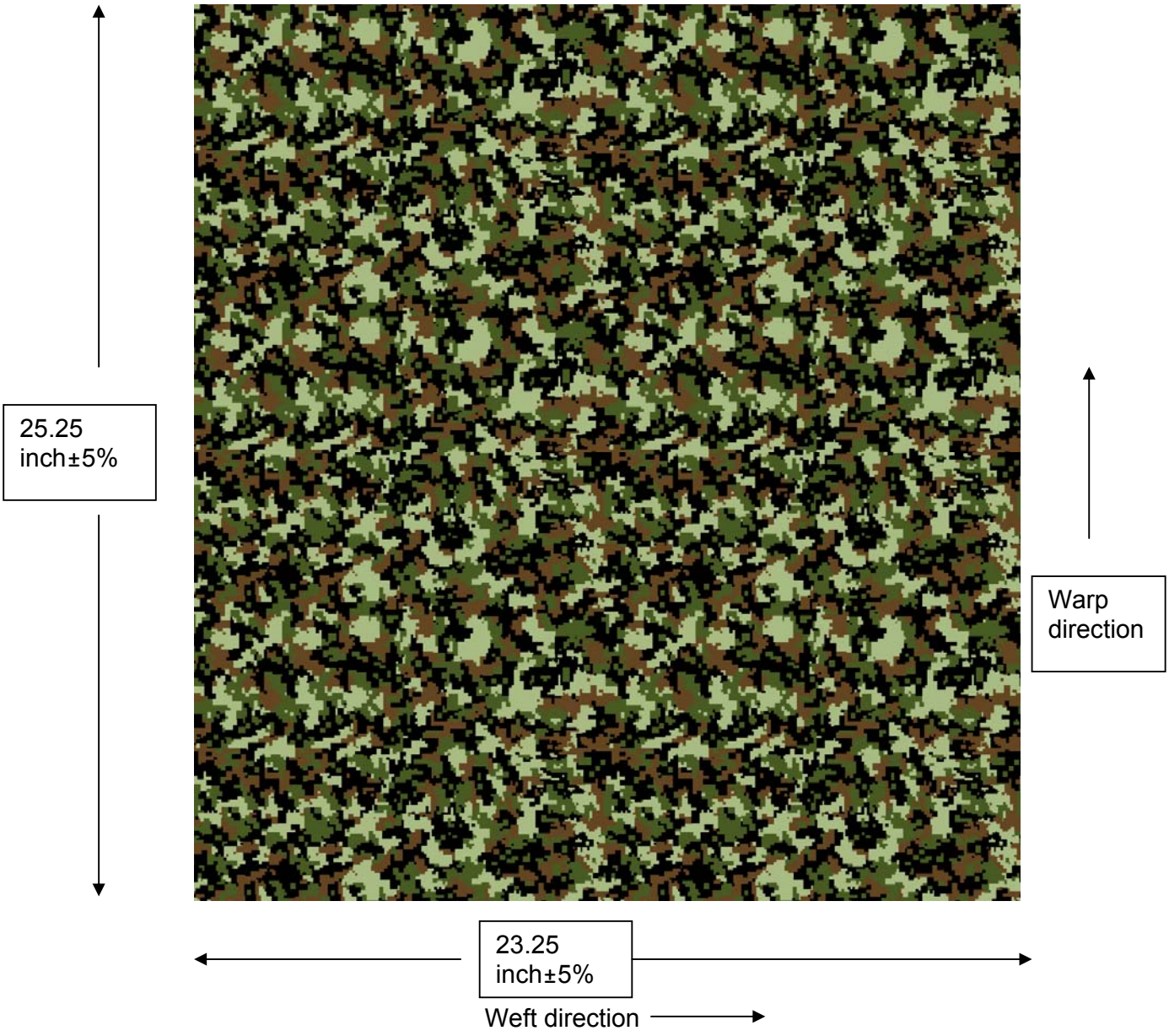


**Fig.12 : Disruptive Print –One repeat of the design**
**(For true colours refer sealed "Nylon Life Jacket")**

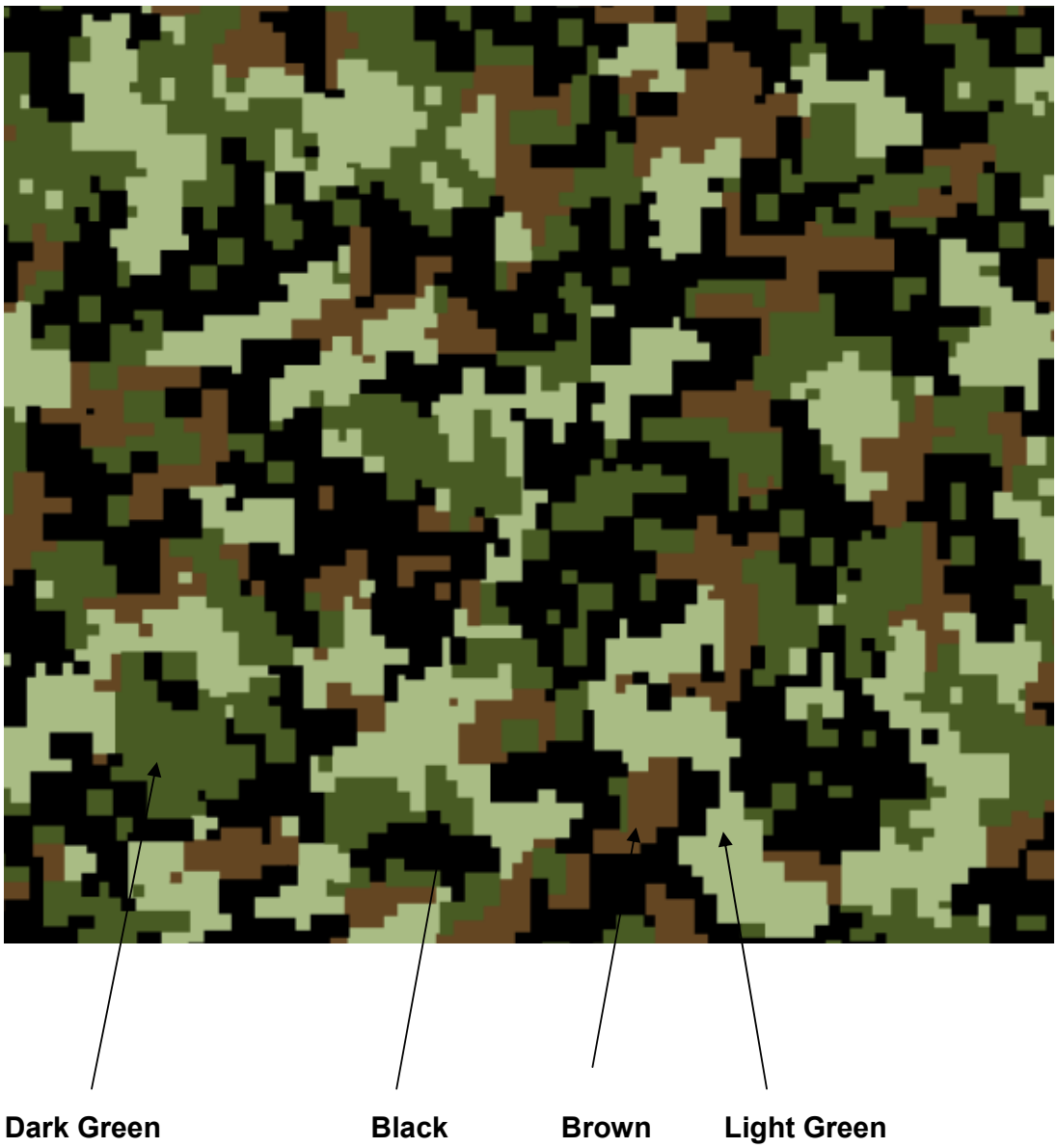


**Fig. 13 : Disruptive Print (For colour identification only)**

**(For true colours refer sealed "Nylon Life Jacket")**

| | F | B | F | B | S | S |
|---|---|---|---|---|---|---|
| B | X | X | X | | | X |
| F | | | X | | | X |
| B | X | | X | X | X | |
| F | X | | | | X | |

**Fig.-14 Nylon Tape - weave repeat (F-face, B-Back, S-Stitching)**

**Note:** One pick in the repeat represent two picks in the fabric. The fabric to be wovn on needle loom.

## 7.0 REFERENCES

7.1 The list of referred standards is given below :

**LIST OF REFERED STANDARDS**

| Sl. No. | Method/Spec. number | Title |
|---|---|---|
| 1 | IS:397(Part I & II) : 2003 | Method for statistical quality control during production |
| 2 | IS:6359: 1971 (RA 2004) | Method for conditioning of Textiles |
| 3 | IS 13510:2000(RA 2006) | Textile-duck, Polyester/cotton blended, Rip-stop-Specification |
| 4 | IS:4229:1992(RA2003) | Nylon Sewing Thread |
| 5 | IS:1963:1981 (RA 2004) | Method for determination of thread per unit length in woven fabric |
| 6 | IS:1964:1970 (RA 2006) | Methods for determination of weight per square meter and weight per linear meter of fabric |
| 7 | IS:1969:1985, (RA 2006) | Method for determination of breaking strength and elongation of woven fabrics |
| 8 | IS:6489:1993, (RA 2006) | Textiles-woven fabrics-determination of tear resistance by the falling pendulum method |
| 9 | IS:12673:1989,(RA 2005) | Textile fabrics-Abrasion resistance-method for determination |
| 10 | IS : 11871: 1986 | Determination of flammability and flame resistance of textile fabric |
| 11 | IS:2005:1988(RA 2004) | Quantitative analysis of Binary mixture of Nylon 6 or Nylon 66 fibre and certain other fibre |
| 12 | IS:667:1981(RA 2004) | Identification of textile fibre |
| 13 | IS 764 : 1979,(RA2008) | Method for determination of colour fastness of textile material to washing-Test 3 |
| 14 | IS 971:1983, Reaffirmed 2004 | Method for determination of colour fastness of textile material to Perspiration |
| 15 | IS 689:1988, Reaffirmed 2004 | Method for determination of colour fastness of textile material to Hot pressing |
| 16 | IS 766:1988, Reaffirmed 2004 | Method for determination of colour fastness of textile material to Rubbing |
| 17 | IS 690:1988, Reaffirmed 2004 | Method for determination of colour fastness of textile material to sea water |
| 18 | IS 2454:1985,(RA 2006) | Method for determination of colour fastness of textile material to artificial Light (Xenon lamp) pressing |
| 19 | IS 1390 : 1983(RA 2004) | Method for determination of pH value of aqueous extract of textile materials |
| 20 | AATCC Test method 173 : 2005 | CMC: Calculation of small colour differences for acceptability |
| 21 | AATCC Evaluation Procedure 7 : 2003 | Instrumental assessment of the change in colour of a test specimen |
| 22 | IS:14181 :2002 | Synthetic Slide Fastner |
| 23 | IS 8156: 1994 RA 2004 | Specification-Synthetic hook and loop tape |
| 24 | IS:7016 :1987) | Method of test for coated and treated fabrics |
| 25 | IS: 6685:1972 | Specification for life Jackets |
| 26 | IS :2977 :1989 Reaffirmed 2005 | Method for determination of dimensional changes on soaking in water |
| 27 | IS :390: 1975 Reaffirmed 2000 | Determination of water repellency of fabric by Spray test |

## 8.0 ANNEXURE

**Annex-1**

**Identification of polyurethane coating**

Take approximately 5 g of the coated fabric. Treat it with 50 ml glacial acetic acid .by warming for several minutes. To this add 0.1 g p-dimethyamino benzaldehyde. The solution is further heated for 2-3 minutes. The solution turns yellow indicates presence of polyurethane.

**Annex-2**

**Identification of low density polyethylene foam**

Low density polyethylene foam can be identified by the following tests:

- It shall float in water
- It shall dissolve in hot toluene and hot benzene
- Its melting point shall be in between 109$^{o}$C and 125$^{o}$C.

.

**Annex-3**

**Determination of pull load of quick release Buckle plastic**

The buckle shall be tested for pull load by applying static load between male and female part of the buckle at a speed of 100 mm/minute.

Scanned by CamScanner