Director General CRPF
Block No. 1 CGO Complex, New Delhi-110003
(Govt. of India/Ministry of Home Affairs)
(Phone / Fax- 011-24360155)
(E-Mail- digprov@crpf.gov.in)

No.U.II-98(Spec)/2020-21-Prov-(BIS Spec)-14 Dated, the 23 Nov' 2022

To

The DsG: AR, BSF, CISF, ITBP, NSG, SSB and BPR&D

Subject: **QRs/Specification of "Textile Boot with Polymeric Sole (Jungle Boot) IS No. 17861-2022". for CAPFs.**

I am directed to refer on the subject mentioned above and to say that the QRs/Specification in respect of **"Textile Boot with Polymeric Sole (Jungle Boot) IS No. 17861-2022" for CAPFs** which has been recommended by CAPFs Sub-Group has been accepted by the competent authority.

2. Henceforth, all the CAPFs may procure the above item required by them, strictly as per the laid down QRs/Specification. QRs/Spec framed by BIS to select the specific parameters from the multiple option is enclosed along with one page note of **"Jungle Boot".**

3. It is also added that BIS certificate may be made mandatory for firms participating in bid. **The earlier QRs/Specification of "Jungle Shoes" approved by MHA vide letter No. U.II-98(Spec)/12-13-Prov dated 08/12/2014 is rescinded.**

4. This has the approval of DG, CRPF on 17/11/2022 (empowered vide MHA letter F.No. 11012/02/2009-Fin-I-17 dated 02/01/2018).

5. This Directorate letter of even No. dated 22/11/2022 vide which **"one page note"** was circulated is hereby withdrawn.

Encl: QRs/Specification alongwith one page note.

23/11/22

(D.N. Lal)
DIG(Prov)

No.U.II-98(Spec)/2020-21-Prov-(BIS Spec)-14 Dated, the 23 Nov' 2022

Copy forwarded to:-

1. SO (IT), North Block-with request to upload the approved QRs/Specification of **"Textile Boot with Polymeric Sole (Jungle Boot) IS No. 17861-2022"** for CAPFs on MHA Website (e-mail ID :soit@nic.in).
2. **Sh. Paritosh Singhal, ACEO(GeM),** Government of India, Ministry of Commerce & Industry, Government e-Marketplace, Jeevan Tara Building, 5-Parliament Street, New Delhi-110001.
3. DIG(IT), Dte Genl., CRPF-with request to upload approved QRs/Specification of **"Textile Boot with Polymeric Sole (Jungle Boot) IS No. 17861-2022"** for CAPFs on CRPF Portal and Selo Module.
4. All Zones/Sectors/GCs/Units HQr for information and necessary action.

Encl: As above.

23/11/22

(D.N. Lal)
DIG(Prov)

One page Note of Jungle Boot- IS 17861:2022

QRs/Specification of Jungle Boot has been framed with BIS standard – (**IS 17861:2022**) under the aegis of BIS redressing the issues raised by user departments by emphasizing improvement in comfort, quality of shoes, life, strength, used in diverse environment etc. and same has been finalized by BIS in coordination with member of forces and rep. from various footwear industries. (*Composition of the committee, responsible for the formulation of this standard is given at Annex-E of **IS-17861:2022***).

On analysis of the above QRs/Specification, some of the parameters have been given with different types of option i.e. materials and manufacturing process etc. Hence, to ensure uniformity/standardization, the following material/ manufacturing process be adopted by CAPFs for procurement process of Jungle Boot in the given **IS 17861:2022**:-

Para No.	Description	Adopted (Required to be procured by CRPF/CAPFs)
4	**Types** a) Type -1 – For use in dry conditions only. b) Type- 2- For wet/slushy conditions	**Types** Since, Jungle Boot are being used by the personnel at dry locations, where monsoon has two - three months impact only, hence it will be feasible to go for procurement of **Jungle Boot – Type -1 – "For use in dry conditions only"**.
5.4	**Weight** a) Type- 1- 1200 g, max b) Type – 2- 1300 g, max	**Weight** a) 1200 gm max. as **Type -1 "For use in dry conditions"** has been selected.
5.5	**Whole Footwear** **5.5.1 Construction** 5.5.1.1 The boots shall be made by direct moulding (pouring/vulcanisation/ injection process) with built in golosh. 5.5.1.2 The upper shall be stitched in lock stitch machine with the edges bound with binding tape and thread. Number of stitches shall be 30 - 40 per 100 mm. The made up upper shall be strobel stitched with insole. The colour of the upper may be olive green/disrupted print/black or as agreed to between purchaser and manufacturer.	**Whole Footwear** 5.5.1.1 The boots shall be made by direct moulding **injection process** with built in golosh. 5.5.1.2 The upper shall be stitched in lock stitch machine with the edges bound with binding tape and thread. Number of stitches shall be 30 - 40 per 100 mm. The made up upper shall be strobel stitched with insole. The colour of the upper can be **olive green/ disrupted print/black as per user requirement**
5.6	**Additional requirements of Whole Footwear** **5.6.1.1** For penetration resistance, metallic	**5.6.1.1** For penetration resistance.

AR WSG ITBP CISF SSB BSF BIS BPRAD

CRPF CRPF CRPF FDDI

Contd -2..

	perforation resistant insert conforming to IS 17275 (Part 1) or non- metallic perforation resistant insert conforming to IS 17275 (Part 2) shall be used. The perforation-resistant insert shall be built into the bottom of the boots in such a manner that it cannot be removed without damaging the footwear.	**non-metallic perforation resistant insert conforming to IS 17275 (Part 2)** shall be used. The perforation-resistant insert shall be built into the bottom of the boots in such a manner that it cannot be removed without damaging the footwear.
5.8	**Lining** 5.8.1 The lining shall be made of woven or Non- Woven textile material having sweat absorbing property.	**Lining** 5.8.1 The lining shall be made of **Non-Woven textile material (Cambrella type)** having sweat absorbing property.
5.11	**Closing Thread** 5.11.2 The colour of the threads shall be as agreed to between the purchaser and the manufacturer. When tested for colour fastness to light as per IS/ISO 105-B02, the rating shall be minimum 5. When tested for colour fastness to washing as per IS/ISO 105-C10 and colour fastness to perspiration as per IS/ISO 105-E04, the rating shall be minimum 4.	**Closing Thread** 5.11.2 The colour of the threads shall be **as per upper colour**. When tested for colour fastness to light as per IS/ISO 105-B02, the rating shall be minimum 5. When tested for colour fastness to washing as per IS/ISO 105-C10 and colour fastness to perspiration as per IS/ISO 105-E04, the rating shall be minimum 4.
5.13	**Insocks** 5.13.1 Material and thickness Insocks shall be made of rubber/ Polymer/elastomer compound with suitable fabric as top covering.	**Insocks** 5.13.1 Material and thickness Insocks shall be made of **Polymer** compound with suitable fabric as top covering.
5.14	**Tongue** The boots shall have full bellow or half bellow tongue which shall be made of the same material as the upper.	**Tongue** The boots shall have **full bellow** tongue which shall be made of the same material as the upper.
5.16	**Sole** 5.16.1 Material For Type-1 the sole is made of PU Single density, PU-PU double density, PU rubber double density (single/double density).	**Sole** 5.16.1 Material For Type-1 the sole is made **of PU rubber double density.**
5.17	**Eyelets** Eyelets shall be made of aluminium, Brass or plastic coated aluminium and shall have minimum collar diameter of 4 mm. 7 to 8 male and female eyelets may be clenced.	**Eyelets** Eyelets shall be made of **black enamel coated Brass** and shall have minimum collar diameter of 4 mm. **8 male and female eyelets** may be clenced.

AR NSG ITBP CISF SSB BSF BIS BPRAD FDDI

CRPF CRPF CRPF CRPF

Approved/Not Approved

(Dr. Sujoy Lal Thaosen)
Director General, CRPF

भारतीय मानक
Indian Standard

IS 17861 : 2022

पॉलिमर के तले युक्त कपड़े के बूट्स (जंगल बूट्स) — विशिष्टि

Textile Boots With Polymeric Sole (Jungle Boots) — Specification

FOR BIS INTERNAL USE. TO BE USED FOR STANDARDS DEVELOPMENT PURPOSE ONLY

ICS 61.060

© BIS 2022

भारतीय मानक ब्यूरो
BUREAU OF INDIAN STANDARDS
मानक भवन, 9 बहादुरशाह ज़फर मार्ग, नई दिल्ली – 110002
MANAK BHAVAN, 9 BAHADUR SHAH ZAFAR MARG
NEW DELHI-110002
www.bis.gov.in www.standardsbis.in

April 2022 **Price Group 6**

Footwear Sectional Committee, CHD 19

FOREWORD

This Indian Standard was adopted by the Bureau of Indian Standards, after the draft finalized by the Footwear Sectional Committee had been approved by the Chemical Division Council.

Textile boots with polymeric sole, more commonly known as jungle boots, are mainly used by police forces, paramilitary forces, similar security agencies and trekkers in carrying out their work. These boots are designed such that they can withstand long strenuous working and walking conditions.

This standard specifies additional requirements to meet the special requirement of armed forces and risks to be encountered at workplace.

The composition of the committee, responsible for the formulation of this standard is given at Annex E.

For the purpose of deciding whether a particular requirement of this standard is complied with the final value, observed or calculated, expressing the result of a test or analysis shall be rounded off in accordance with IS 2 : 2022 'Rules for rounding off numerical values (*second revision*)'. The number of significant places retained in the rounded value should be the same as that of the specified value in this standard.

FOR BIS INTERNAL USE. TO BE USED FOR STANDARDS DEVELOPMENT PURPOSE ONLY

Indian Standard

TEXTILE BOOTS WITH POLYMERIC SOLE (JUNGLE BOOTS) — SPECIFICATION

1 SCOPE

This standard prescribes requirements and methods of test for textile boots with polymeric sole (Jungle boots).

2 REFERENCES

The standards listed in Annex A contain provisions which, through reference in this text, constitute provisions of this standard. At the time of publication, the editions indicated were valid. All standards are subject to revision, and parties to agreements based on this standard are encouraged to investigate the possibility of applying the most recent editions of the standards listed Annex A.

3 TERMINOLOGY

For the purpose of this standard, definitions given in IS 2050 and **3** of IS 15298 (Part 4) shall apply.

4 TYPES

Jungle boots are classified into the following types according to the use pattern:

a) Type 1 — For use in dry conditions only; and
b) Type 2 — For use in wet/slushy conditions.

5 PHYSICAL REQUIREMENTS

5.1 Design

The boots shall have toe spring 18 ± 1 mm. Design of jungle boot is based on agreement between purchaser and manufacturer.

5.2 Size and Fitting

Sizes shall be in the range of 4 to 12 (English system with G/H fitting) conforming to the dimensions given in IS 1638 for adult men and women.

5.3 Height of Upper

The height of the upper, when measured in accordance with **6.2** of IS 15298 (Part 1), shall be as given in Table 1 or as agreed to between the purchaser and manufacturer.

Table 1 Height of the upper

(*Clause* 5.3)

Shoe Size	Height
4	150 ± 2 mm
5-6	154 ± 2 mm
7-8	158 ± 2 mm
9-10	162 ± 2 mm
11-12	166 ± 2 mm

5.4 Weight

The maximum weight of one pair of shoes of English size 8 shall be as given under with an increase or decrease of 50 g with one unit increase or decrease in size, respectively:

a) Type 1 — 1200 g, *max*; *or*
b) Type 2 — 1300 g, *max*.

5.5 Whole Footwear

5.5.1 *Construction*

5.5.1.1 The boots shall be made by direct moulding (pouring/vulcanisation/injection process with built in golosh.

5.5.1.2 The upper shall be stitched in lock stitch machine with the edges bound with binding tape and thread. Number of stitches shall be 30 – 40 per 100 mm. The made up upper shall be strobel stitched with insole. The colour of the upper may be olive green/disrupted print/black or as agreed to between purchaser and manufacturer.

5.5.1.3 The back seam of the boot upper shall be reinforced with upper material of width 25 mm with edges folded inside (turning of 12 mm on each side). The reinforcement shall also form a jug loop at the top back edge for easy donning of boots.

5.5.1.4 Joining of quarter and vamp shall be done with two rows of stitching. Tab shall be reinforced with two parallel rows of stitched at a distance of 4 – 5 mm away

FOR BIS INTERNAL USE TO BE USED FOR STANDARDS DEVELOPMENT PURPOSE ONLY

from the face of the stitching. Length of tab stitched shall be 10 – 12 mm.

5.5.2 *Upper – Outsole Bond Strength*

When the boots are tested according to method given in **5.2** of IS 15298 (Part 1), the bond strength shall not be less than 4.0 N/mm, unless there is tearing of the sole, in which case the bond strength shall not be less than 3.0 N/mm.

5.5.3 *Consolidation Test (For Type 1 and Type 2)*

The upper and lining in Type 1 and Type 2 boots shall be adhered with minimum 5 mm thick PU foam in between and shall not separate at a load of 15 N when representative samples of width 25 ± 0.5 mm cut from quarter of the upper along the length of the boot are tested in accordance with IS 3400 (Part 5).

5.5.4 *Ergonomic Features*

The boots shall be considered to satisfy the ergonomic requirements if the questionnaire given in **5.1** of IS 15298 (Part 1), is completed and all answers are positive.

However, if the boots meet the criteria specified in **8.4.1.4** of IS 15298 (Part 1), then question **4.3** of Table 2 of IS 15298 (Part 1) is not applicable.

5.5.5 *Slip Resistance*

When tested in accordance with **5.11** of IS 15298 (Part 1), the boots shall conform to **5.3.4.2** or **5.3.4.3** of IS 15298 (Part 4).

5.5.6 *Energy Absorption of Seat Region*

When tested in accordance with **5.14** of IS 15298 (Part 1), the energy absorption of the seat region shall not be less than 20 J.

5.5.7 *Water Resistance (For Type 2)*

The total area of water penetration inside the Type 2 boots shall not be greater than 3 cm^2 when tested in accordance with either:

a) **5.15.1** of IS 15298 (Part 1), after 100 trough lengths;
b) **5.15.2** of IS 15298 (Part 1), after 15 min; or
c) **6.2.5** of IS 15298 (Part 2).

5.6 Additional Requirements of Whole Footwear

5.6.1 *Penetration Resistance*

5.6.1.1 For penetration resistance, metallic perforation resistant insert conforming to IS 17275 (Part 1) or non-metallic perforation resistant insert conforming to IS 17275 (Part 2) shall be used. The perforation-resistant insert shall be built into the bottom of the boots in such a manner that it cannot be removed without damaging the footwear.

5.6.1.2 When footwear having metallic insert is tested in accordance with **5.8.2** of IS 15298 (Part 1), the force required to penetrate the sole unit shall be not less than 1 100 *N*.

5.6.1.3 When footwear having non-metallic insert is tested in accordance with **5.8.3** of IS 15298 (Part 1), using a force of at least 1 100 *N*, the tip of the test nail shall not penetrate through the test piece. In order to achieve a "pass" result, the tip of the test nail shall not protrude from the test piece. This can be checked by visual, cinematographic or electrical detection.

5.6.2 *Electrical Resistance (Antistatic)*

When tested in accordance with **5.10** of IS 15298 (Part 1), after conditioning in a dry and wet atmosphere, the electrical resistance shall not be less than 100 *k*Ω and shall not be greater than 1 000 *M*Ω in each case.

5.6.3 *Heat Insulation of Sole Complex*

When tested in accordance with **5.12** of IS 15298 (Part 1), the footwear shall satisfy the requirement given in **6.2.3.1** of IS 15298 (Part 4).

5.6.4 *Cold Insulation of Sole Complex*

When tested in accordance with **5.13** of IS 15298 (Part 1), the footwear shall satisfy the requirement given in **6.2.3.2** of IS 15298 (Part 4).

5.7 Upper

5.7.1 *Material*

The upper material for Type 1 and Type 2 boots shall be polyester blended fabric.

5.7.2 *Tear Strength*

When tested in accordance with clause **6.3** of IS 15298 (Part 1), the upper shall meet the requirement for coated fabric and textile given in clause **5.4.3** of IS 15298 (Part 4).

5.7.3 *Water Vapour Permeability and Coefficient (For Type 1 and Type 2 Boots)*

When tested in accordance with clauses **6.6** and **6.8** of IS 15298 (Part 1), the water vapour permeability shall not be less than 0.8 mg/(cm^2.h) and the water vapour coefficient shall not be less than 15 mg/cm^2.

5.7.4 *Colour Fastness*

When the upper material is tested for colour fastness to light as per IS/ISO 105-B02 and colour fastness to washing as per IS/ISO 105-C10, the rating shall be minimum 4.

5.8 Lining

Lining shall be provided for Type 1 and Type 2 boots only.

FOR BIS INTERNAL USE TO BE USED FOR STANDARDS DEVELOPMENT PURPOSE ONLY

5.8.1 *Material*

The lining shall be made of woven or non-woven textile material having sweat absorbing property.

5.8.2 *Tear Strength*

When the lining is tested in accordance with clause **6.3** of IS 15298 (Part 1), it shall satisfy the requirements prescribed for coated fabric and textile in clause **5.5.1** of IS 15298 (Part 4).

5.8.3 *Abrasion Resistance*

When tested in accordance with clause **6.12** of IS 15298 (Part 1), the lining shall not develop any holes before 25 600 cycles in dry condition and 12 800 cycles in wet conditions.

5.8.4 *Water Vapour Permeability and Coefficient (for Type 1 only)*

When tested in accordance with clause **6.6** of IS 15298 (Part 1), the water vapour permeability shall not be less than 2.0 mg/(cm^2.h).

When tested in accordance with clause **6.8** of IS 15298 (Part 1), the water vapour coefficient shall not be less than 20 mg/cm^2.

5.9 Outer Toe Cap

For Type 1 and Type 2 boots, outer toe cap and arch support piece shall be made of full chrome leather, have a minimum thickness of 1.0 mm and shall be fitted in appropriate position.

5.9.1 *Tear Strength*

When the outer toe cap and arch support is tested in accordance with clause **6.3** of IS 15298 (Part 1), it shall satisfy the requirements prescribed in Table 13 of IS 15298 (Part 4).

5.10 Binding Tape

5.10.1 The binding tape shall be made of textile material and have a minimum width of 13 mm when tested according to IS 1954. The binding tape shall have a minimum breaking load of 360 *N* when tested on 50 cm test length using methods prescribed in IS 1969 (Part 1) or IS 1969 (Part 2).

5.10.2 The colour of the binding tape shall match with the colour of the upper or shall be as per agreement between purchaser and manufacturer. When tested for colour fastness to light as per IS/ISO 105-B02 and colour fastness to washing as per IS/ISO 105-C10, the rating shall be minimum 4.

5.11 Closing Thread

5.11.1 The sewing thread for upper closing shall have breaking load not less than 40 *N* when tested by IS 4930 (Part 3).

5.11.2 The colour of the threads shall be as agreed to between the purchaser and the manufacturer. When tested for colour fastness to light as per IS/ISO 105-B02, the rating shall be minimum 5. When tested for colour fastness to washing as per IS/ISO 105-C10 and colour fastness to perspiration as per IS/ISO 105-E04, the rating shall be minimum 4.

5.12 Insole

5.12.1 *Material and Thickness*

The insole shall be made of non-woven textile or cotton or blend of polyester and cotton. When determined in accordance with **7.1** of IS 15298 (Part 1), the thickness of the insole shall be minimum 2.0 mm.

NOTE — For boots having penetration resistance, the perforation resistant insert is the insole and it shall conform to requirements of perforation resistant insert prescribed in IS 17275 (Part 1) or IS 17275 (Part 2).

5.12.2 *Abrasion Resistance*

When insoles are tested in accordance with **7.3** of IS 15298 (Part 1), the abrasion damage shall not be more severe than that illustrated by the reference test pieces for the same family of materials before 400 cycles [*see* **7.3.6** of IS 15298 (Part 1)].

5.12.3 *Water Absorption and Desorption*

When tested in accordance with **7.2** of IS 15298 (Part 1), the water absorption shall be not less than 70 mg/cm^2 and the water desorption shall be not less than 80 percent of the water absorbed.

5.13 Insocks

5.13.1 *Material and Thickness*

Insocks shall be made of rubber/polymer/elastomer compound with suitable fabric as top covering. One pair of detachable in-socks having minimum thickness of 3.0 mm at toe and 5.0 mm at heel with arch support shall be provided with each pair of boots.

5.13.2 *Abrasion Resistance*

When insocks are tested in accordance with **6.12** of IS 15298 (Part 1), the wearing surface shall not develop any holes before the following number of cycles has been performed:

a) 25 600 cycles when dry; and
b) 12 800 cycles when wet.

5.13.3 *Bond Strength of Textile Layer and Insock*

Bond strength of textile layer with PU sponge shall be no less than 1 N/mm when tested in dry condition and no less than 0.7 N/mm when tested in wet condition, in accordance with ISO/TR 20882.

5.14 Tongue

The boots shall have full bellow or half bellow tongue which shall be made of the same material as the upper.

FOR BIS INTERNAL USE ONLY
USED FOR STANDARDS
DEVELOPMENT PURPOSE ONLY

5.15 Toe Puff and Counter Stiffener

For Type 1 boots, the toe puff shall have a minimum thickness of 1.5 mm and the counter stiffener shall have a minimum thickness of 2 mm. Both shall be made of thermoplastic material.

For Type 2 boots, the toe puff shall have a minimum thickness of 0.8 mm and the counter stiffener shall have a minimum thickness of 1.5 mm. Both shall be made of rubberized textile material.

5.16 Sole

5.16.1 *Material*

For Type 1 and 2 the sole is made of PU single density, PU-PU double density, PU rubber double density, rubber (single/double density).

5.16.2 *Thickness*

When tested as per method given in **8.1** of IS 15298 (Part 1), the thickness (d_1) shall not be less than 4 mm and the cleat height (d_2) shall not be less than 2.5 mm.

Additionally, for Type 1 boots, the thickness of rubber outsole shall be minimum 5 mm at forepart, minimum 4 mm at waist part and minimum 6 mm at heel part. Depth of inverse cleat at sole heel shall be maximum 3.0 mm.

5.16.3 *Sole Density*

The density of PU for soling shall be 0.40-0.55 g/cm^3 when used for midsole and 0.9-1.2 g/cm^3 when used for outsole, measured as per method given in Annex A of IS 6664. The density of rubber out sole for soling shall be maximum 1.25 g/cm^3, when measured as per method A of IS 3400 (Part 9).

5.16.4 *Hardness*

The hardness of PU for soling shall be 40 – 50 Shore(A) when used for midsole and 65 ± 5 Shore (A) when used for outsole, measured as per method given in IS 13360 (Part 5/Sec 11). The hardness of rubber for soling shall be 65 ± 5 IRHD when measured as per IS 3400 (Part 2).

5.16.5 *Ageing*

The change in initial hardness of rubber sole shall be in the range of + 5 and –0 IRHD [tested according to IS 3400 (Part 2)] after ageing test at 100 ± 1 ºC for 24 h in accordance with IS 3400 (Part 4).

5.16.6 *Tear Strength*

When outsole is tested in accordance with **8.2** of IS 15298 (Part 1), the tear strength shall not be less than:

a) 8 k*N*/m for a material with a density higher than 0.9 g/cm^3; and
b) 5 k*N*/m for a material with a density lower than or equal to 0.9 g/cm^3.

5.16.7 *Abrasion Resistance*

When outsoles are tested in accordance with **8.3** of IS 15298 (Part 1), the relative volume loss shall not be greater than 250 mm^3 for materials with a density of 0.9 g/cm^3 or less, and not greater than 150 mm^3 for materials with a density greater than 0.9 g/cm^3.

5.16.8 *Flexing Resistance*

When soles are tested in accordance with **8.4** of IS 15298 (Part 1), the cut growth shall not be greater than 4 mm before 30 000 flex cycles.

Spontaneous cracks are accepted in the following circumstances:

a) Only the centre of the tread area shall be assessed for cracking, that is, cracks under the toecap zone shall be ignored.
b) Superficial cracks up to 0.5 mm deep shall be ignored.
c) Soles shall be deemed to be satisfactory if cracks are not deeper than 1.5 mm, not longer than 4 mm and not more than five in number.

5.16.9 *Hydrolysis*

When polyurethane soles are tested in accordance with **8.5** of IS 15298 (Part 1), the cut growth shall be not greater than 6 mm before 150 000 flex cycles.

5.16.10 *Interlayer Bond Strength*

The bond between the midsole and the outsole shall be not less than 4.0 *N*/mm, unless there is tearing of the sole, in which case the bond strength shall be not less than 3.0 *N*/mm, when tested according to method given in **5.2** of IS 15298 (Part 1).

5.17 Eyelets

Eyelets shall be made of aluminium, brass or plastic coated aluminium and shall have minimum collar diameter of 4 mm. 7 to 8 male and female eyelets may be clenced. The minimum force required to pull out the eyelets from the upper shall be 250 N, when tested as per the method given in Annex B.

5.18 Laces

5.18.1 *Material*

The laces shall be made of nylon or polyester blend and round in shape with a minimum length of 130 cm. Colour of the laces shall be as agreed to between the purchaser and manufacturer.

5.18.2 *Colour Fastness*

When the laces are tested for colour fastness to light as per IS/ISO 105-B02 and colour fastness to washing as per IS/ISO 105-C10, the rating shall be minimum 4.

FOR BIS INTERNAL USE TO BE USED FOR STANDARDS DEVELOPMENT PURPOSE ONLY

5.18.3 *Breaking Load and Tag Retention*

The minimum breaking load of the laces shall be 400 *N* when tested as per the method given in Annex C. The minimum tag retention load shall be 140 *N* when tested as per the method given in Annex C.

5.18.4 *Abrasion Resistance*

5.18.4.1 *Lace to lace*

Laces shall withstand minimum 5 000 cycles without breaking when tested for lace to lace abrasion using Method 1 of ISO 22774.

5.18.4.2 *Lace to eyelet*

Laces shall withstand minimum 5 000 cycles without breaking when tested for lace to eyelet abrasion using Method 3 of ISO 22774.

6 CHEMICAL REQUIREMENTS

The boots and its constituent materials shall be free from toxic and hazardous chemicals and shall meet the requirements specified in Table 1 of IS 17011.

7 MARKING

7.1 Each boot shall be permanently marked with the following:

a) Size;
b) Manufacturer's name and brand;
c) Year and month of manufacture;
d) Shelf life, if PU is used (1 year from month of manufacture);
e) Number and year of the standard, based upon which the shoes are produced; and
f) Any other statutory marking.

7.2 BIS Certification Marking

The product(s) conforming to the requirements of this standard may be certified as per the conformity assessment schemes under the provisions of the *Bureau of Indian Standards Act*, 2016 and the Rules and Regulations framed thereunder, and the products may be marked with the Standard Mark.'

8 INFORMATION TO BE SUPPLIED

Each pair of boots shall be supplied with the following information in Hindi and English:

a) Name and full address of manufacturer;
b) Details of customer care service provider;
c) Instruction for storage and maintenance;
d) Drying procedure for wet shoes and proper cleaning of shoes; and
e) The footwear is not a GREEN footwear and not bio-degradable.

FOR BIS INTERNAL USE TO BE USED FOR STANDARDS DEVELOPMENT PURPOSE ONLY

ANNEX A

(*Clause* 2)

LIST OF REFERRED STANDARDS

IS No.	*Title*
IS/ISO 105-B02 : 2014	Textiles — Tests for colour fastness: Part B02 Colour fastness to artificial light: Xenon arc fading lamp test
IS/ISO 105-C10 : 2006	Textiles — Tests for colour fastness: Part C10 colour fastness to washing with soap or soap and soda
IS/ISO 105-E04 : 2008	Textiles — Tests for colour fastness: Part E04 Colour fastness to perspiration
1638 : 1969	Specification for sizes and fitting of footwear (*first revision*)
1720 : 1978	Specification for cotton sewing threads (*first revision*)
1954 : 1990	Determination of length and width of woven fabrics — Methods (*second revision*)
1969 (Part 1) : 2018	Textiles — Tensile properties of fabrics: Part 1 Determination of maximum force and elongation at maximum force using the strip method (*fourth revision*)
(Part 2) : 2018	Textiles — Tensile properties of fabrics: Part 2 Determination of maximum force using the grab method (*fourth revision*)
I2050 : 1991	Glossary of terms and elating to footwear (*first revision*)
3400 (Part 2) : 2014	Methods of test for vulcanized rubber: Part 2 Rubber, vulcanized or thermoplastic — Determination of hardness (Hardness between 10 Irhd And 100 Irhd) (*fourth revision*)
(Part 4) : 2012	Methods of test for vulcanized rubber: Part 4 Accelerated ageing and heat resistance (*third revision*)
(Part 5) : 1986	Methods of test for vulcanized rubber: Part 5 Adhesion of rubber to textile fabrics (*second revision*)
(Part 9) : 2014	Methods of test for vulcanized rubber: Part 9 Rubber, vulcanized or thermoplastic — Determination of density (*third revision*)
5041 : 1978	Specification for footwear and stationery eyelets (*first revision*)
6110 : 1983	Specification for double — Texture rubberized waterproof fabrics (*fourth revision*)
6664 : 1992	Rubber microcellular sheets for soles and heels — Specification (*first revision*)
13360 (Part 5/Sec 11) : 2013	Plastics — Methods of testing: Part 5 Mechanical properties, Section 11 Determination of indentation hardness by means of durometer (Shore hardness) (*first revision*)
13510 : 2000	Textiles — Duck, polyester/cotton blended, rip-Stop — Specification (*first revision*)
15298 (Part 1) : 2015	Personal protective equipment: Part 1 Test methods for footwear (*second revision*)
(Part 4) : 2017	Personal protective equipment: Part 4 Occupational footwear (*second revision*)
15844 : 2010	Sports footwear specification
17011 : 2018	Chemical requirements for footwear and footwear materials
17275 (Part 1) : 2019	Perforation resistant inserts for protection of feet — Specification: Part 1 Metallic perforation resistant inserts
(Part 2) : 2019	Perforation resistant inserts for protection of feet — Specification Part 2 Non-metallic perforation resistant inserts
ISO/TR 20882 : 2007	Footwear — Performance requirements for components for footwear — Lining and insocks
ISO 22774 : 2004	Footwear — Test methods for accessories: shoe laces — Abrasion resistance

FOR BIS INTERNAL USE ONLY
USED FOR STANDARDS
DEVELOPMENT PURPOSE ONLY

ANNEX B

(*Clause* 5.17)

PULL OUT TEST FOR EYELETS

B-1 This method is used for the determination of the strength of eyelet attachment to the footwear upper.

B-2 PRINCIPLE

A piece of footwear facing containing the eyelet is clamped in a universal tensile testing machine and a long, thin conical plunger is inserted into the eyelet from the reverse side of the facing. Force is applied until the plunger detaches the eyelet from the base material. The force at which the eyelet detaches is recorded as the pull out force of the eyelet.

B-3 APPARATUS

B-3.1 Tensile testing machine capable of measuring 1 k*N* force to an accuracy of 2 percent, and capable of moving its jaws at a rate of 100 ± 10 mm/minimum (*see* Fig 1).

B-3.2 Compression jig (*see* Fig 2) to be fitted with the tensile testing machine such that the conical plunger is vertical. The conical plunger should be capable of fitting into eyelets of various sizes. A plunger of length approximately 80 mm with the diameter tapering from 12 to 3 mm is generally suitable. A hole is provided on the lower platform of the jig. The test specimen can be positioned and clamped such that the eyelet aligns with the hole and the plunger can pass through the eyelet and the hole.

B-3.3 Sharp knife is used for preparation of specimen.

B-4 PREPARATION OF TEST SPECIMENS

Use the knife to cut at least three sections of footwear facing such that the eyelet is at the centre. It is recommended that each section is circular with at least 23 ± 5 mm of material at all points around the eyelet. In order to ensure these dimensions, it may be necessary to remove the eyelet adjacent to the one to be tested.

Conditioning of test specimen is not required and test can be conducted at room temperature.

B-5 PROCEDURE

Fit the compression jig on the universal tensile testing machine. Clamp the test specimen on the platform of the jig such that the eyelet is aligned with the hole. For standard eyelets, the clenched side shall face the plunger and for blind eyelets, the flanged side shall face the plunger (*see* Fig 3). Operate the universal tensile testing machine so that the plunger is inserted into the eyelet at a rate of 100 ± 10 mm/minimum. Record the force in N required to detach the eyelet from its base material or damage the assembly without complete detachment. Stop the tensile testing machine and return the plunger to its starting position. Repeat the procedure for all test specimens. Calculate the arithmetic mean of the values as the pull out force of the eyelets.

FOR INTERNAL USE OF BIS STANDARDS ONLY PURPOSE ONLY

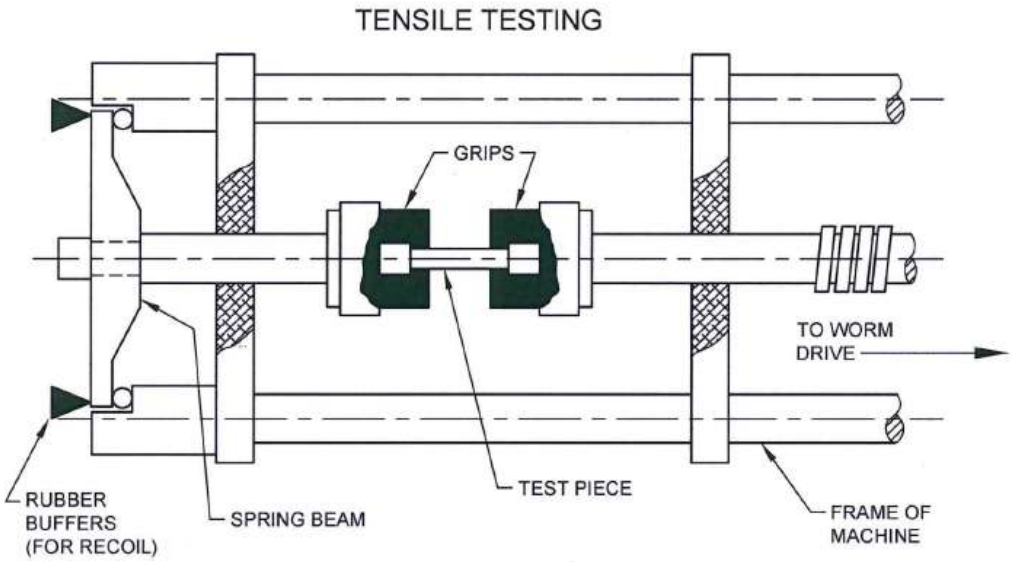

Fig.1 Schematic Diagram of Tensile Testing Machine

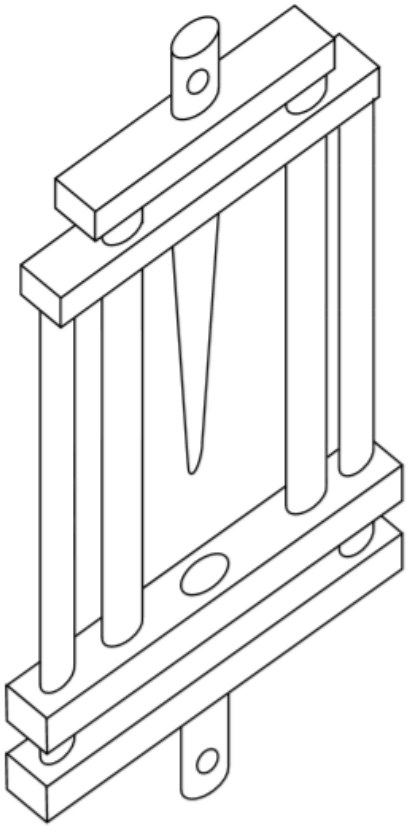

Fig. 2 Compression Jig with Conical Plunger and Hole on the Platform

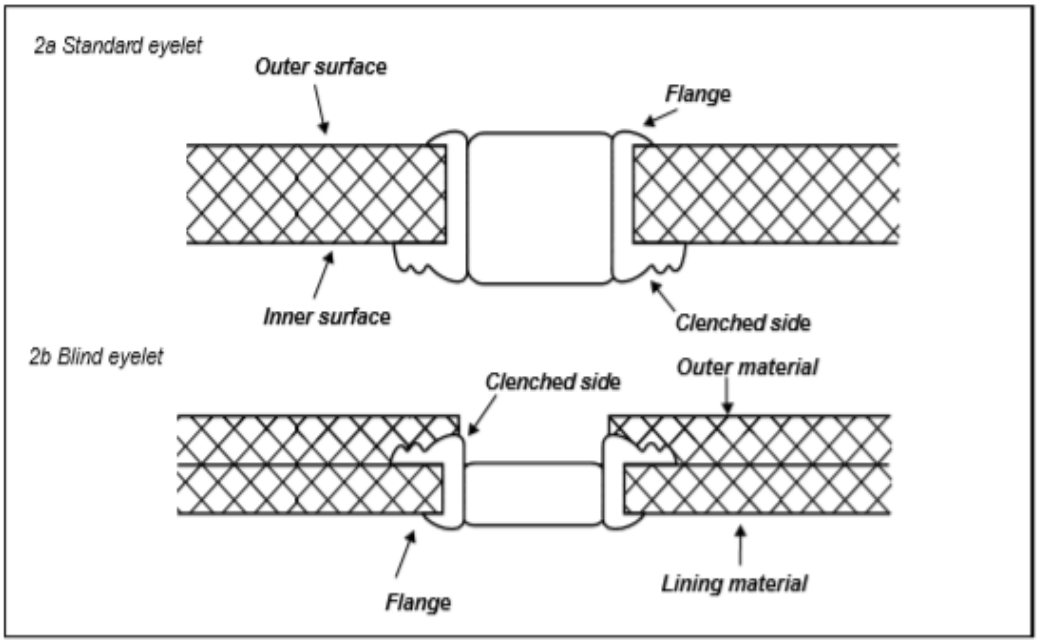

Fig. 3 Types of Eyelets and Their Attachment to Footwear

ANNEX C

(*Clause* 5.18.3)

BREAKING LOAD OF SHOE LACE

C-1 SCOPE

This method is to determine force required to break the shoe laces**.** This test is applicable for all types of shoe lace

C-2 PRINCIPAL

A length of shoe lace fixed and extended until it break using tensile testing machine. The force required to break the shoe lace is measured.

C-3 REFERENCE

BS EN 10002-2 : 1992 Verification of the force measuring system of the tensile testing machine.

C-4 APPARATUS AND MATERIALS

A tensile testing machine with a jaw separation rate of 100 ± 10 mm/minimum and the capacity of force up to 1 k*N* to an accuracy of 2 percent.

C-5 PROCEDURE

Store the shoe lace to be tested in a standard controlled environment at 27 ± 2 °C and 65 ± 2 percent RH for at least 24 h prior to testing.

Cut three laces of length more than 200 mm. Insert the test lace between the grips of required in a tensile testing machine and adjust the jaw length to 200 ± 2 mm. Operate the machine so that the jaws separate at a speed of 100 ± 10 mm/minimum until the lace break. Repeat the test for other two lace specimens. Record mean breaking load in kg.

FOR BIS INTERNAL USE. TO BE USED FOR STANDARDS DEVELOPMENT PURPOSE ONLY

ANNEX D

(*Clause* 5.18.3)

GRIPPING STRENGTH OF TAGS

D-1 APPARATUS

D-1.1 Tensile strength testing machine, power-driven with a rate of traverse of 115 ± 12 mm/minimum.

D-1.2 Slotted Plate

A rigid metal plate of suitable dimensions with a vertical edge tapered slot along the length of the plate. In conjugation with the slopped plate, use the upper jaw of the testing machine to keep the slot at right-angle to the direction of application of load during the test.

D-2 PROCEDURE

Move the conditioned test specimen with one of its tags uppermost horizontally along the slot until both sides of the base of the tag rest on the top of the slotted plate. Centre the plate so that longitudinal axis of the test specimen is along the axis of the application of the load. Apply by hand an initial tension sufficient to strengthen the lace. Clamp the free end of the straightened specimen in the pulling jaw so that the free distance between the upper grip and the pulling jaw is 100 mm at the start of the test. Operate the machine and record the highest load, in kg, registered before the tag is pulled from the lace. Discard the result and test another specimen if:

a) the tag comes through the slot without being removed from the fabric lace; and

b) the tag buckles at the base r the tag is scrapped without being removed from the lace before the specified minimum gripping strength is reached.

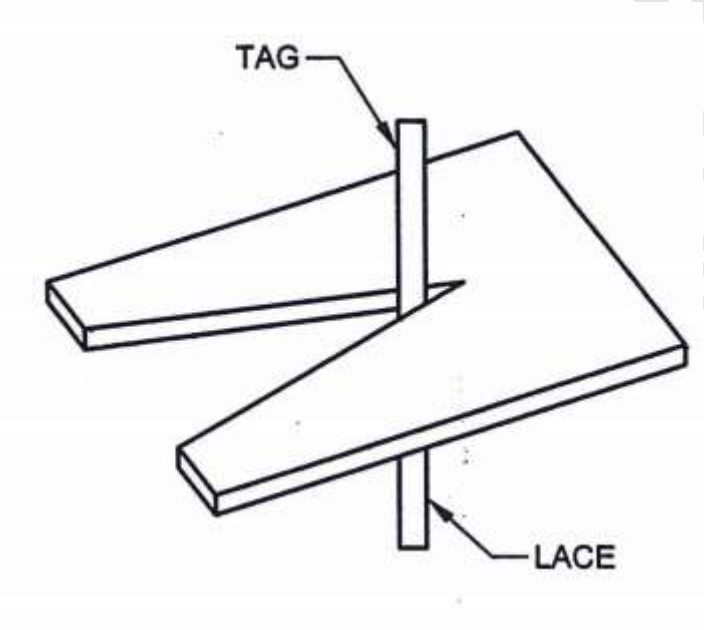

FIG. 4 SLOTTED PLATE

FOR BIS USE ONLY

ANNEX E

(*Foreword*)

COMMITTEE COMPOSITION

Footwear Sectional Committee, CHD 19

Organization	*Representative(s)*
In personal capacity	Dr B. N. Das (***Chairman***)
Ambuja Cements, Mumbai	Shri Piyush B. Jain
Arvind Footwear Pvt Ltd, Ahmednagar	Shri Dilip Borkar
Atharva Labs, Noida	Aparna Parvatikar Shri V. B. Parvatikar (*Alternate*)
BASF Polyurethanes India Ltd, Mumbai	Shri Alok Goel Shri Jitender Kumar (*Alternate*)
Bihar Rubber Co Ltd, Ranchi	Shri Jayanta Kumar Lahiri
Border Security Force, New Delhi	Shri K. L. Shah Shri Prem Vishwas (*Alternate*)
Bureau of Police Research and Development, Delhi	Shri Jagir Chand
Central Footwear Training Institute, Agra	Shri Sanatan Sahoo Shri S. K. Bhatia (*Alternate*)
Central Institute for Mining and Fuel Research, Dhanbad	Dr J. K. Pandey
Central Leather Research Institute, Chennai	Dr R. Mohan Shri Sathyaraj (*Alternate*)
Central Reserve Police Force, Ministry of Home Affairs, New Delhi	Randhir Kumar Jha Shri R. K. Thakur (*Alternate*)
Council for Footwear Leather and Accessories	(Cfla) Executive Director Mr Rajeev Sharma (*Alternate*)
Dept. of Industrial Policy & Promotion, New Delhi	Shri Nand Lal
Directorate General of Mines Safety, Dhanbad	Director (MSE) Dy Director (MSE) (*Alternate*)
Dye General Aeronautical Quality Assurance (DGAQA), New Delhi	Satyananda Swain Wing Cdr G. S. Ghatti (*Alternate*)
Directorate General of Quality Assurance, Kanpur	Shri S. Chakraborty Shri Sanjay Verma (*Alternate*)
Directorate General of Factory Advice Service & Labour Institute, Ministry of Labour & Employment	Dr Brij Mohan Shrimati M. K. Mandre (*Alternate*)
Footwear Design & Development Institute, Noida	Shri Shailendar Saxena Shri Saroj Kumar Panda (*Alternate*)
Government e-Marketplace	Shri N. K. Malhotra Shri Akhilesh Kumar (*Alternate*)
In personal capacity	Neeraj Garg
Indian Footwear Components Manufacturers' Association (IFCOMA), Noida	Shri Mani Almal Shri S. K. Verma (*Alternate*)
Jasch Industries Ltd	Shri Navneet Garg
Lancer Footwear India Pvt Ltd, New Delhi	Saurabh Gupta

FOR BIS INTERNAL USE. TO BE USED FOR STANDARDS DEVELOPMENT PURPOSE ONLY

Organization	*Representative(s)*
Liberty Shoes Ltd, (P U Division), Karnal	Shri Adesh Gupta Shri S. S. Lahiri (*Alternate*)
M B Rubber Private Limited	Shri Vipan Mehta Dr P. S. Bhattacharya (*Alternate*)
Mangla Plastics	Shri J. Basak
Mayur Leather Products Ltd	Shri Shailender Ku Neogi Shri Akhilesh Poddar (*Alternate*)
MSME-TDC Meerut	Shri Aditya Prakash Sharma Shri Tularam Bharti (*Alternate*)
National Institute of Fashion Technology, Delhi	Dr E. Sivasakthi
Pinza Footwear, New Delhi	Shri Prem Mehani
Prolific Engineers	Shri G. P. Kedia
Relaxo Footwears Ltd	Ms Rashmi Asthana Shri Ajay Chouthey (*Alternate*)
Steel Authority of India Ltd, Bhilai	Shri V. K. Agarwal Shri A. K. Saha (*Alternate*)
Top Lasts	Shri Deepak Manchanda Shri Anurag Sharma (*Alternate*)
XO Footwear, Delhi	Nalin Gupta Manoj Kumar (*Alternate*)
BIS Director General	Shri Ajay Kumar Lal, Scientist 'E' and Head (CHD) [Representing Director General (*Ex-officio*)]

Member Secretary

Preeti Prabha
Scientist 'C' (CHD), BIS

FOR BIS INTERNAL USE. TO BE USED FOR STANDARDS DEVELOPMENT PURPOSE ONLY

FOR BIS INTERNAL USE. TO BE
USED FOR STANDARDS
DEVELOPMENT PURPOSE ONLY

Bureau of Indian Standards

BIS is a statutory institution established under the *Bureau of Indian Standards Act*, 2016 to promote harmonious development of the activities of standardization, marking and quality certification of goods and attending to connected matters in the country.

Copyright

BIS has the copyright of all its publications. No part of these publications may be reproduced in any form without the prior permission in writing of BIS. This does not preclude the free use, in the course of implementing the standard, of necessary details, such as symbols and sizes, type or grade designations. Enquiries relating to copyright be addressed to the Head (Publication & Sales), BIS.

Review of Indian Standards

Amendments are issued to standards as the need arises on the basis of comments. Standards are also reviewed periodically; a standard along with amendments is reaffirmed when such review indicates that no changes are needed; if the review indicates that changes are needed, it is taken up for revision. Users of Indian Standards should ascertain that they are in possession of the latest amendments or edition by referring to the website- www.bis.gov.in or www.standardsbis.in.

This Indian Standard has been developed from Doc No.: CHD 19 (15709).

Amendments Issued Since Publication

Amend No.	Date of Issue	Text Affected

FOR BIS INTERNAL USE. TO BE USED FOR STANDARDS DEVELOPMENT PURPOSE ONLY

BUREAU OF INDIAN STANDARDS

Headquarters:

Manak Bhavan, 9 Bahadur Shah Zafar Marg, New Delhi 110002
Telephones: 2323 0131, 2323 3375, 2323 9402 *Website*: www.bis.gov.in

Regional Offices:		*Telephones*
Central	: 601/A, Konnectus Tower-1, 6th Floor, DMRC Building, Bhavbhuti Marg, New Delhi 110002	2323 7617
Eastern	: 8th Floor, Plot No 7/7 & 7/8, CP Block, Sector V, Salt Lake, Kolkata, West Bengal 700091	2367 0012 2320 9474
Northern	: Plot No. 4-A, Sector 27-B, Madhya Marg Chandigarh 160019	265 9930
Southern	: C.I.T. Campus, IV Cross Road, Taramani, Chennai 600113	2254 1442 2254 1216
Western	: Plot No. E-9, Road No.-8, MIDC, Andheri (East), Mumbai 400093	2821 8093

Branches : AHMEDABAD. BENGALURU. BHOPAL. BHUBANESHWAR. CHANDIGARH. CHENNAI. COIMBATORE. DEHRADUN. DELHI. FARIDABAD. GHAZIABAD. GUWAHATI. HIMACHAL PRADESH. HUBLI. HYDERABAD. JAIPUR. JAMMU & KASHMIR. JAMSHEDPUR. KOCHI. KOLKATA. LUCKNOW. MADURAI. MUMBAI. NAGPUR. NOIDA. PANIPAT. PATNA. PUNE. RAIPUR. RAJKOT. SURAT. VISAKHAPATNAM.

Published by BIS, New Delhi